US008961380B2

(12) **United States Patent**
Langen

(10) **Patent No.: US 8,961,380 B2**
(45) **Date of Patent: *Feb. 24, 2015**

(54) **METHOD AND SYSTEM FOR FORMING A CARTON FROM A CARTON BLANK**

(76) Inventor: **H. J. Paul Langen**, Brampton (CA)

(*) Notice: Subject to any disclaimer, the term of this patent is extended or adjusted under 35 U.S.C. 154(b) by 84 days.

This patent is subject to a terminal disclaimer.

(21) Appl. No.: **12/998,047**

(22) PCT Filed: **Sep. 11, 2009**

(86) PCT No.: **PCT/CA2009/001249**

§ 371 (c)(1),
(2), (4) Date: **Mar. 11, 2011**

(87) PCT Pub. No.: **WO2010/028485**

PCT Pub. Date: **Mar. 18, 2010**

(65) **Prior Publication Data**

US 2011/0166007 A1 Jul. 7, 2011

Related U.S. Application Data

(60) Provisional application No. 61/136,542, filed on Sep. 12, 2008.

(51) **Int. Cl.**
B31B 5/00 (2006.01)
B31B 1/00 (2006.01)
(Continued)

(52) **U.S. Cl.**
CPC ... ***B31B 1/46*** (2013.01); ***B31B 1/06*** (2013.01); ***B31B 1/44*** (2013.01); ***B31B 3/00*** (2013.01);
(Continued)

(58) **Field of Classification Search**
CPC B31B 1/06; B31B 1/44; B31B 1/46; B31B 3/28; B31B 3/46; B31B 2201/0264; B31B 2201/2654; B31B 2201/2666; B65D 5/20; B65D 5/36
USPC 493/126, 127, 163, 175, 176, 181, 183
See application file for complete search history.

(56) **References Cited**

U.S. PATENT DOCUMENTS

1,643,564 A 9/1927 Seiler
2,997,830 A 8/1961 Nelson
(Continued)

FOREIGN PATENT DOCUMENTS

CA 1242422 9/1988
FR 2775658 A1 9/1999
JP S54143385 A 11/1979

OTHER PUBLICATIONS

International Search Report for PCT International Application No. PCT/CA2009/001249, filed Sep. 11, 2009.
(Continued)

Primary Examiner — Hemant M Desai
(74) *Attorney, Agent, or Firm* — Smart & Biggar

(57) **ABSTRACT**

Systems and methods are disclosed for forming a carton. The system may comprise a magazine for storing a plurality of carton blanks in a generally flat configuration. The system also has a mandrel and a panel rotation apparatus. The mandrel has a first surface oriented at a first orientation and a second surface oriented at a second orientation that may be generally orthogonal to the first orientation. The panel rotation apparatus is operable to engage a second panel of the carton blank and rotate the second panel to proximate to, and generally in the same orientation as, the second surface of the mandrel such that the second panel is oriented in a second orientation generally orthogonal to the first panel.

31 Claims, 27 Drawing Sheets

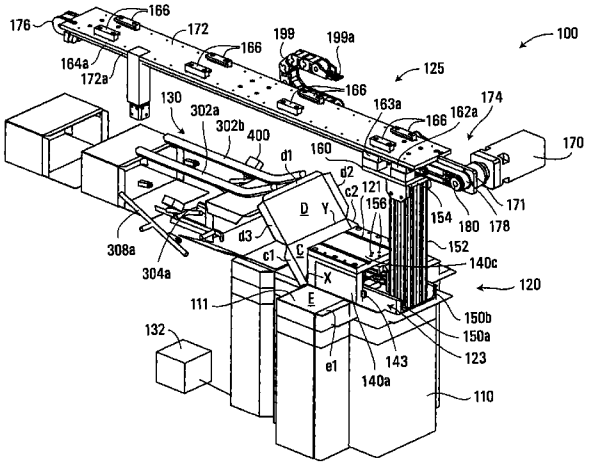

(51) **Int. Cl.**

B31B 5/36	(2006.01)
B31B 5/74	(2006.01)
B31B 1/46	(2006.01)
B31B 1/06	(2006.01)
B31B 1/44	(2006.01)
B31B 3/00	(2006.01)
B65D 5/20	(2006.01)

(52) **U.S. Cl.**

CPC ***B65D 5/20*** (2013.01); *B31B 2201/0264* (2013.01); *B31B 2201/2654* (2013.01); *B31B 2201/2666* (2013.01)

USPC **493/127**; 493/163; 493/183

(56) **References Cited**

U.S. PATENT DOCUMENTS

3,196,761	A		7/1965	Ullman
3,280,531	A		10/1966	Meyer-Jagenberg
3,461,642	A		8/1969	Langan at al.
3,543,469	A		12/1970	Ullman
3,590,700	A	*	7/1971	Paxton et al. 493/6
3,611,885	A	*	10/1971	Paxton 493/142
3,854,651	A		12/1974	Osborne
3,866,391	A		2/1975	Puskarz et al.
3,941,037	A	*	3/1976	Reichert 493/167
3,986,319	A		10/1976	Puskarz et al.
3,990,210	A		11/1976	McDonough et al.
4,164,171	A		8/1979	Meyers et al.
4,932,930	A	*	6/1990	Coalier et al. 493/128
5,154,041	A		10/1992	Schneider
5,593,375	A		1/1997	Franci
5,876,319	A	*	3/1999	Holton 493/84
7,678,036	B1		3/2010	Malitas et al.
7,935,041	B2	*	5/2011	Graham et al. 493/98
8,323,165	B2	*	12/2012	Atoui 493/175
2002/0033351	A1		3/2002	Usui et al.
2007/0037682	A1	*	2/2007	Scholtes et al. 493/175
2008/0110967	A1		5/2008	Walling
2010/0263333	A1	*	10/2010	Langen 53/456
2011/0065559	A1	*	3/2011	Atoui 493/175

OTHER PUBLICATIONS

International Search Report for PCT International Application No. PCT/CA2010/001948, filed Dec. 8, 2010.

Written Opinion for PCT International Application No. PCT/CA2010/001948, filed Dec. 8, 2010.

Extended European Search Report for EP 09812568.5 dated Jan. 17, 2014.

* cited by examiner

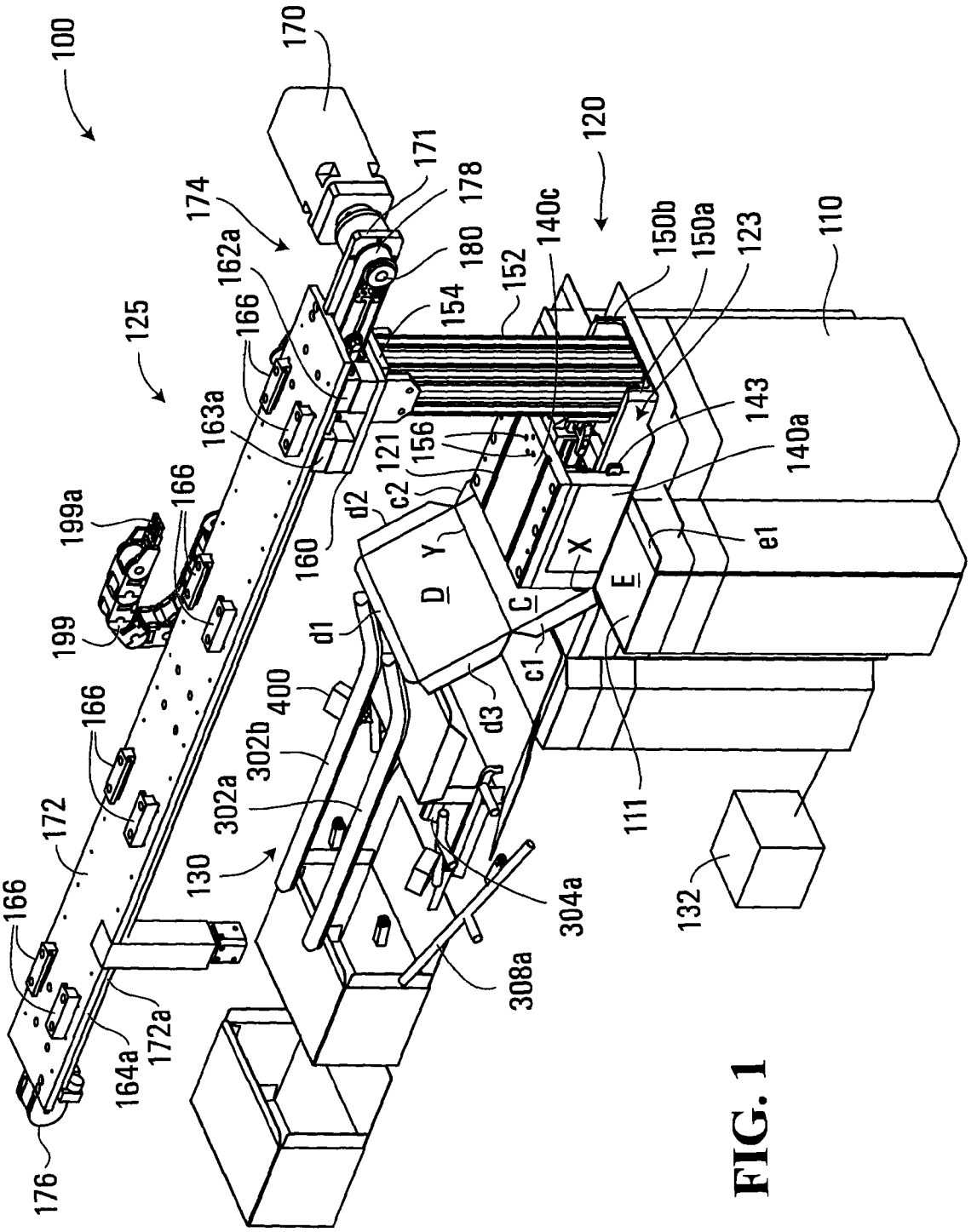
100
170
171
178
174
162a
180
154
152
140c
120
150b
150a
123
110
125
166
163a
156
121
143
140a
199a
166
c2
d2
160
Y
X
e1
D
C
E
199
d1
c1
400
d3
166
302b
302a
111
172
130
304a
132
166
308a
172a
164a
176

FIG. 1

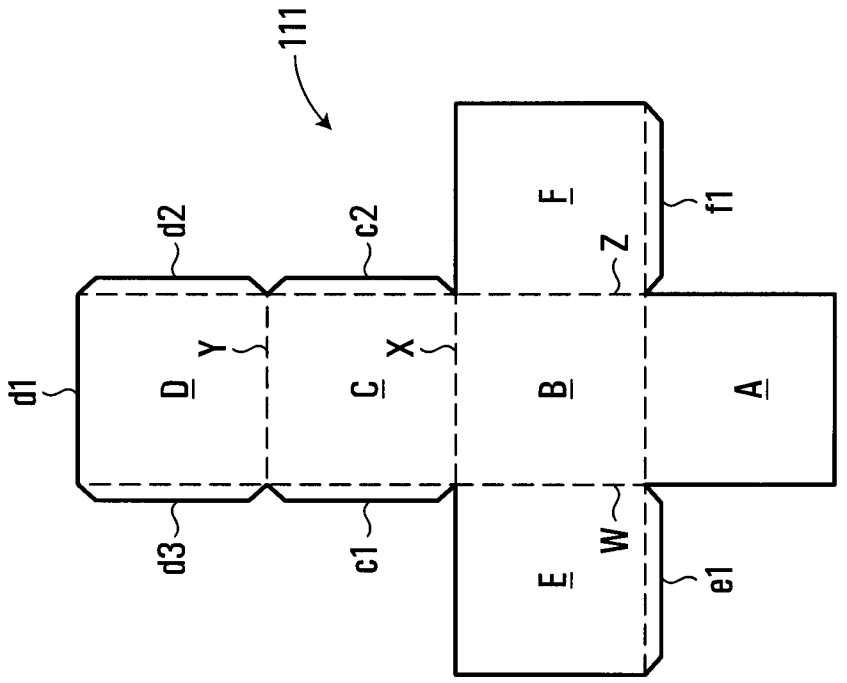

FIG. 1A

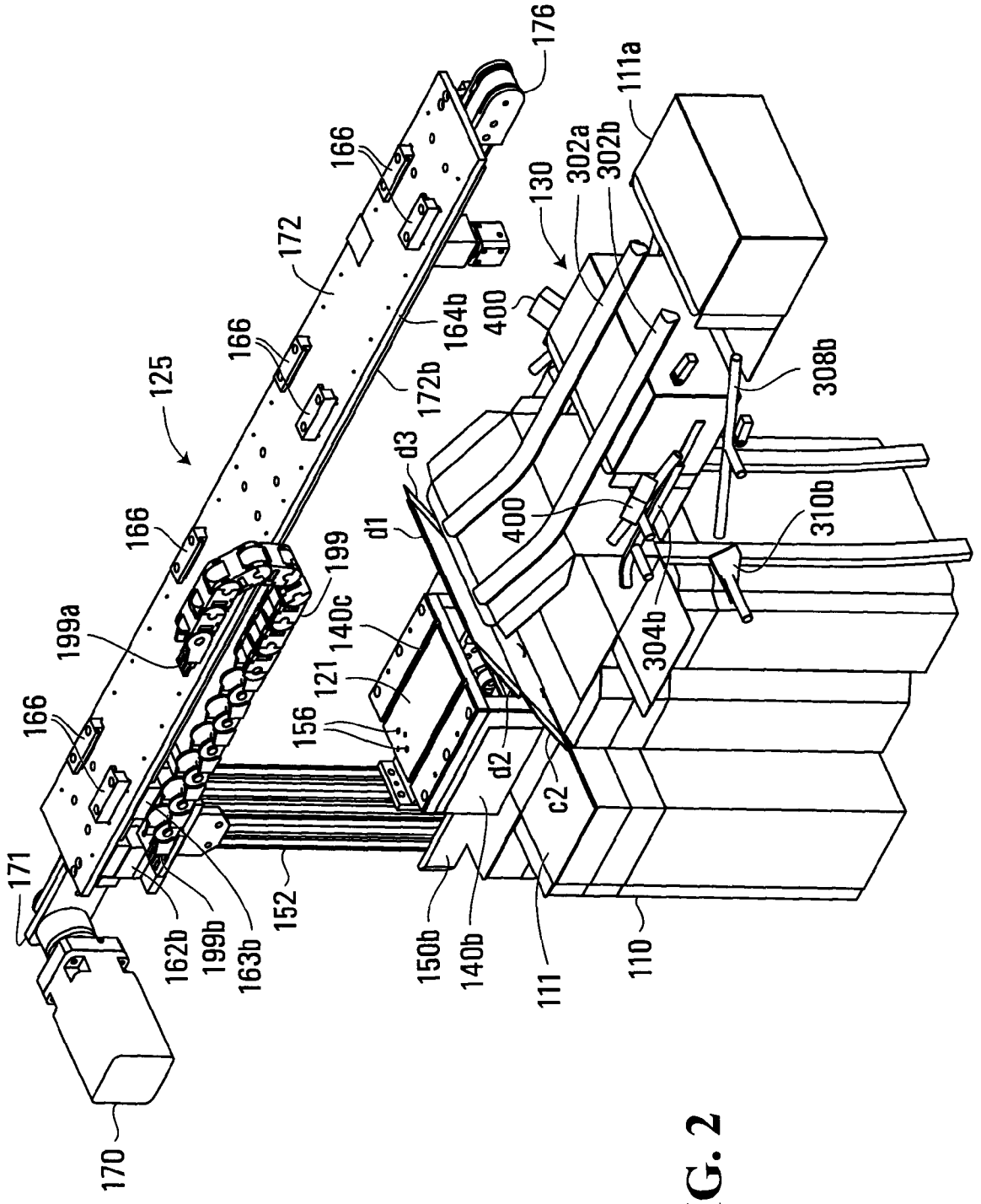
176
111a
166
302a
302b
130
172
164b
400
166
125
172b
308b
d3
166
d1
400
310b
199
199a
140c
304b
166
121
156
d2
c2
171
152
150b
140b
111
110
162b
199b
163b
170

FIG. 2

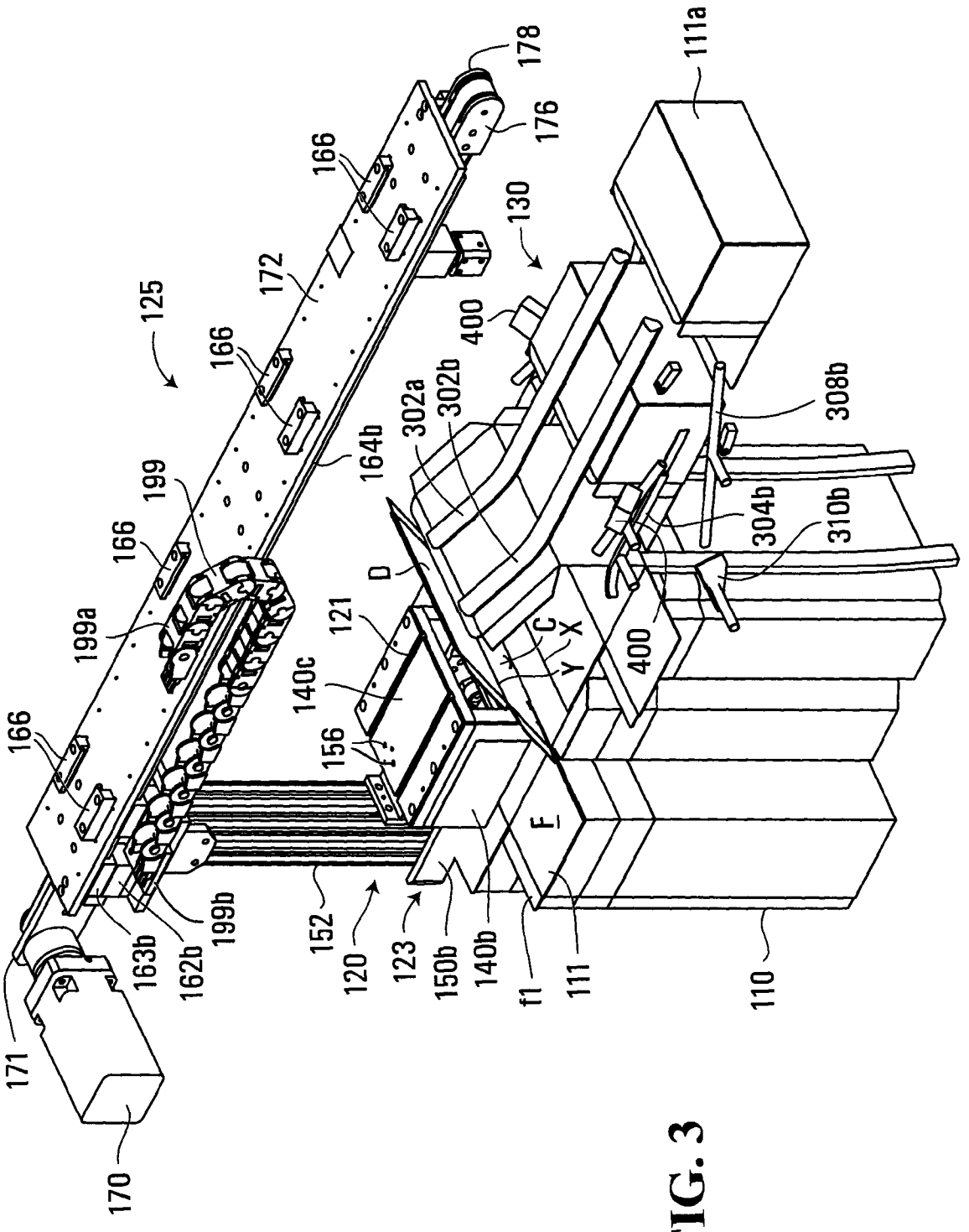
125
166
172
178
176
111a
130
400
302a
302b
308b
164b
199
199a
304b
310b
D
121
C
X
Y
140c
156
F
152
120
123
150b
140b
f1
111
110
163b
162b
199b
171
170

FIG. 3

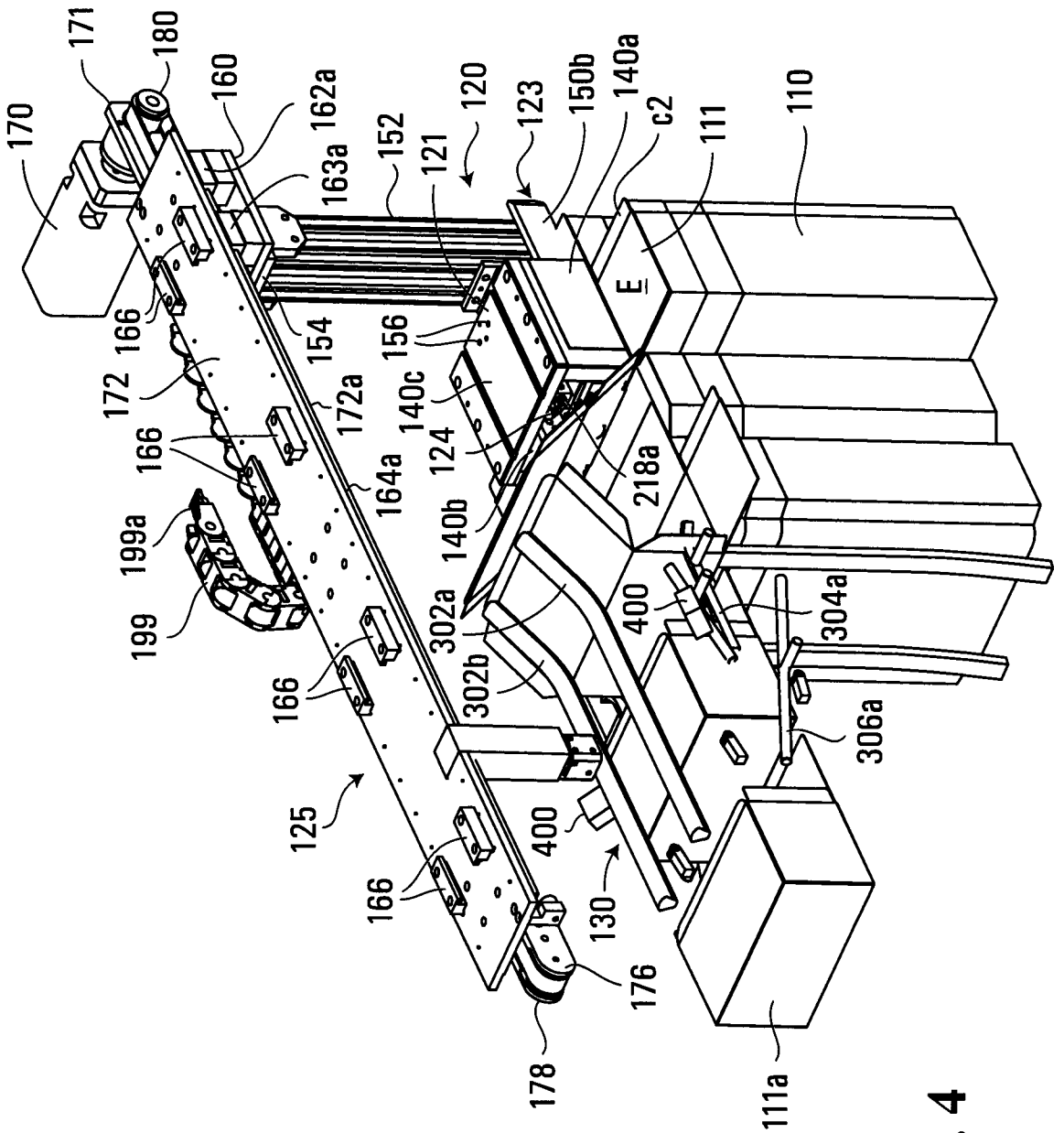
170
171
180
160
162a
163a
152
121
120
123
150b
140a
c2
111
110
E
166
172
154
156
172a
140c
124
218a
164a
140b
199a
199
302a
302b
400
304a
306a
125
130
176
178
111a

FIG. 4

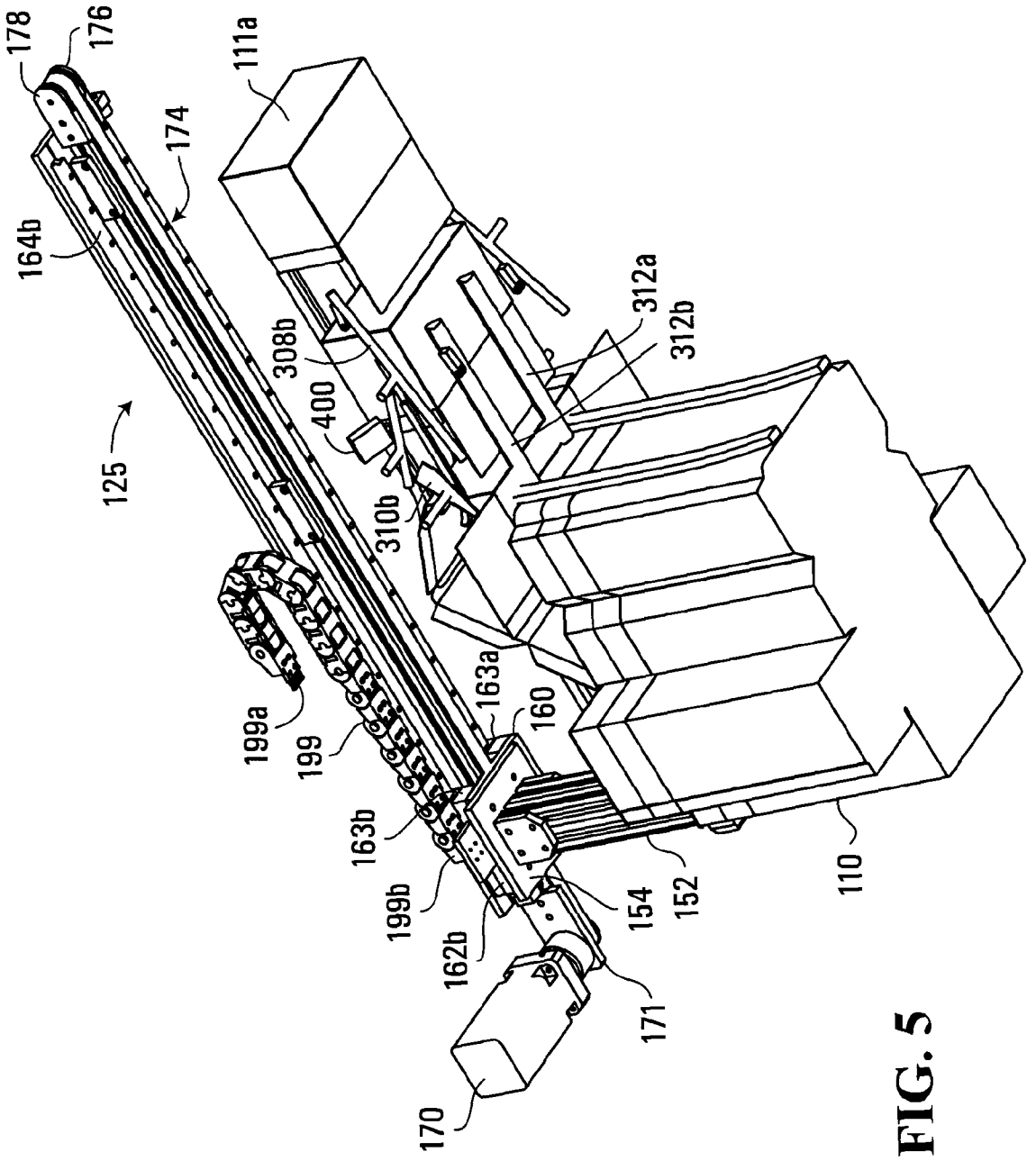
178
176
111a
174
164b
308b
400
312a
312b
125
310b
163a
160
199a
199
163b
199b
162b
154
152
110
171
170

FIG. 5

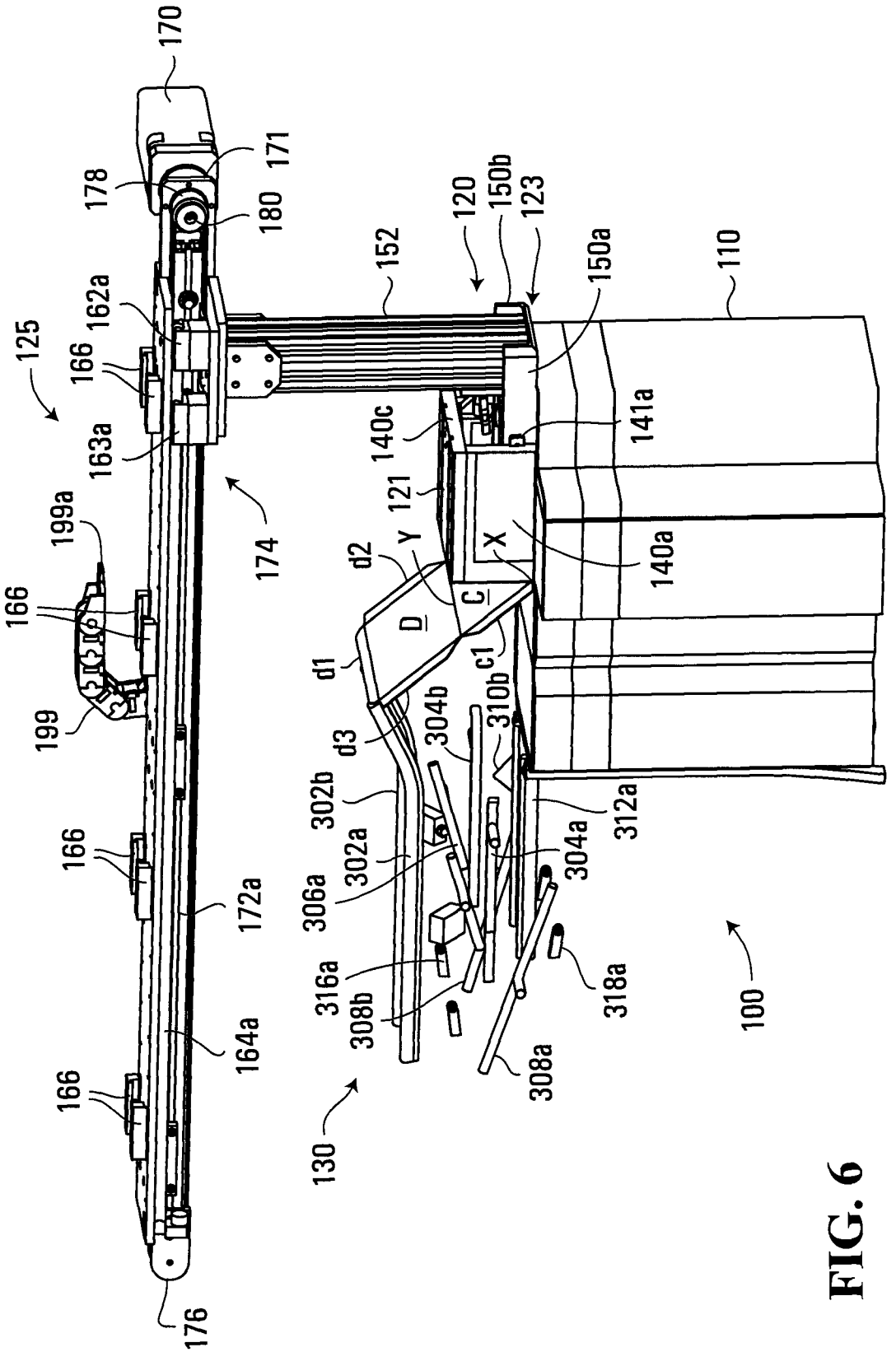
170
171
178
180
152
120
150b
123
150a
110
125
162a
166
163a
140c
141a
121
199a
174
d2
Y
X
140a
166
C
D
d1
c1
199
310b
304b
d3
302b
312a
166
302a
304a
306a
172a
316a
318a
308b
164a
166
308a
130
100
176

FIG. 6

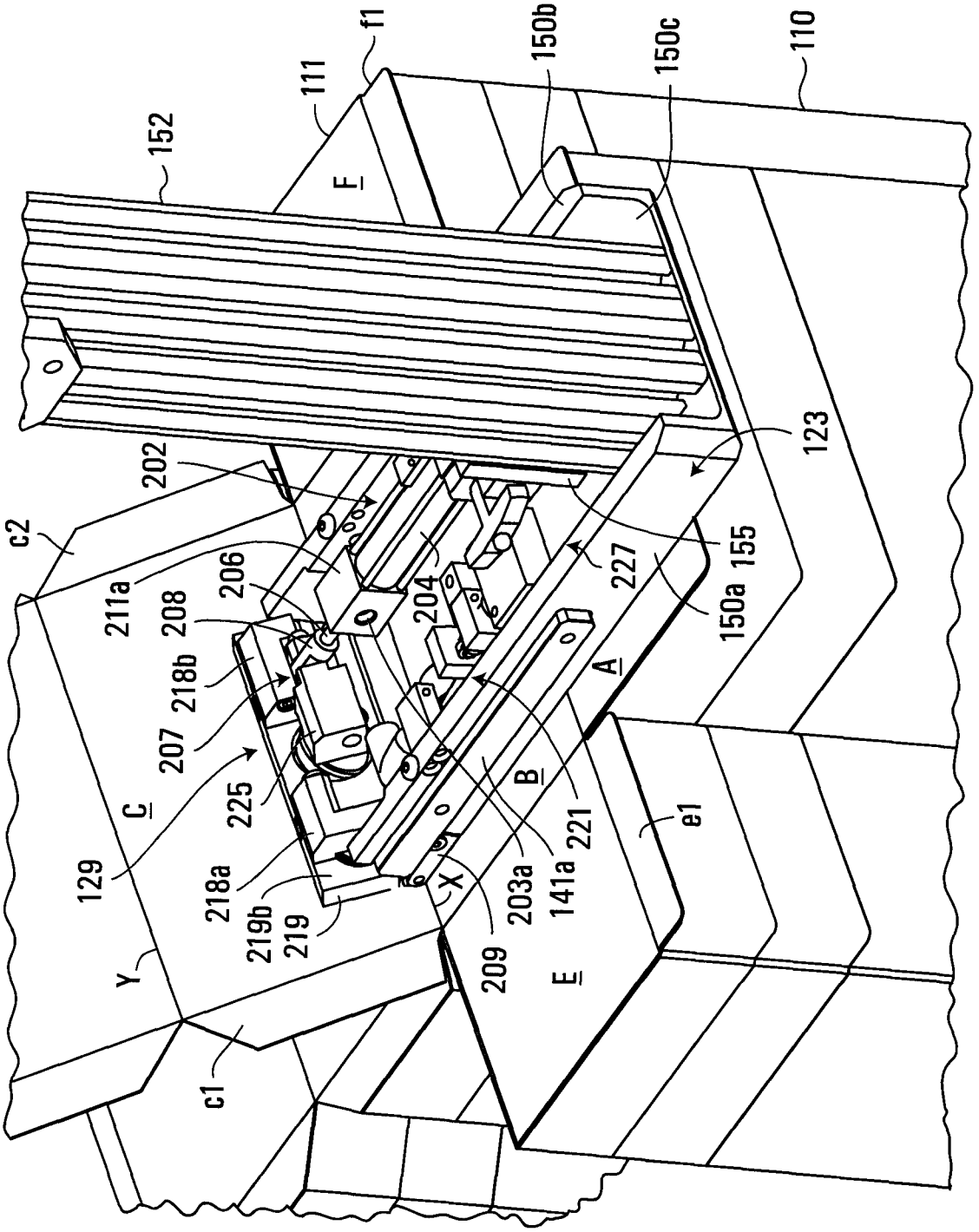
152
111
f1
F
150b
150c
110
123
202
c2
211a
206
208
218b
207
225
C
129
218a
219b
219
Y
c1
204
227
155
150a
A
B
221
141a
203a
209
X
E
e1

FIG. 7

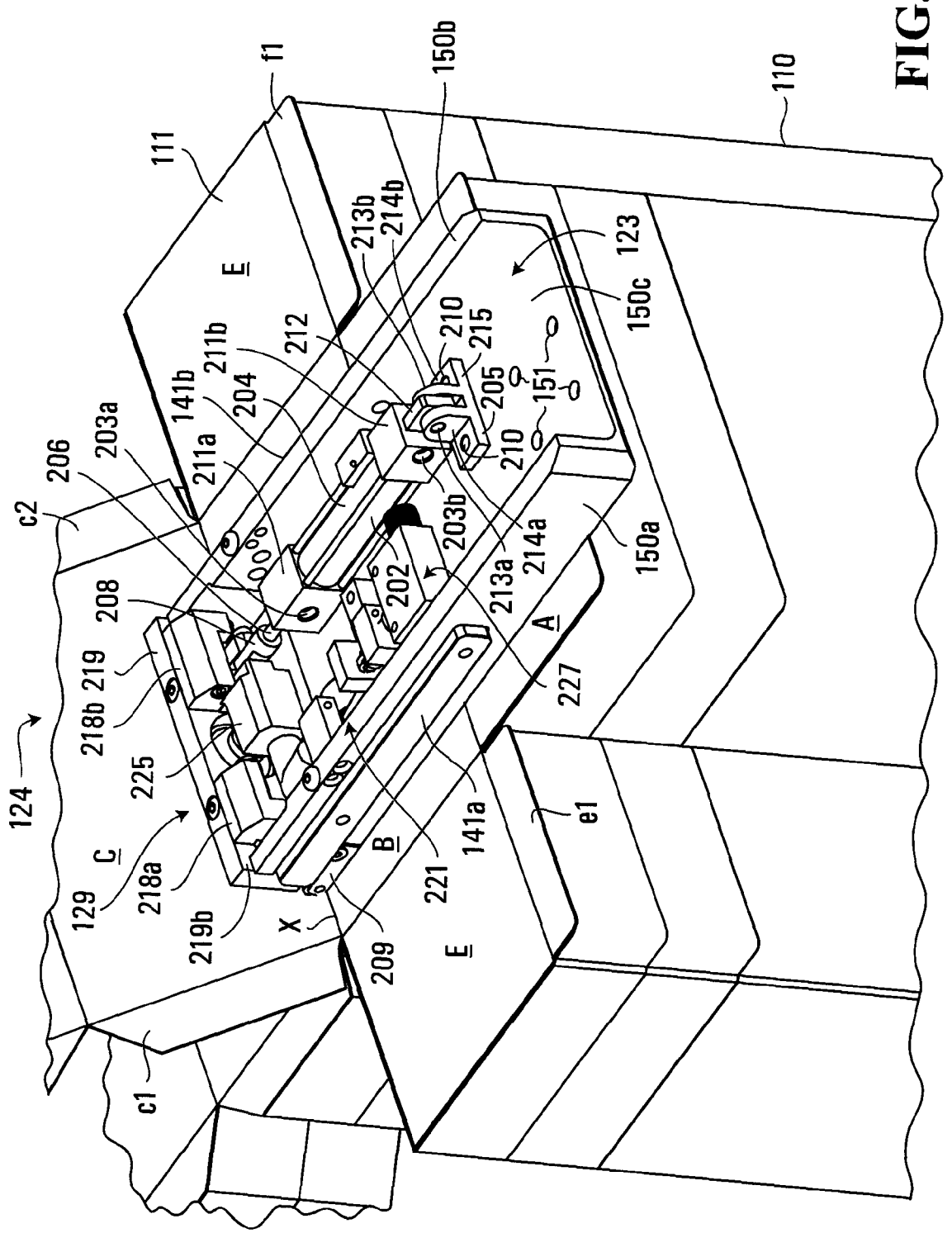
f1
150b
110
111
E
213b
214b
123
150c
210
215
212
211b
205
151
141b
204
203a
206
211a
210
c2
203b
214a
150a
202
213a
208
A
219
218b
227
225
124
141a
e1
C
B
221
129
218a
219b
X
209
E
c1

FIG. 8

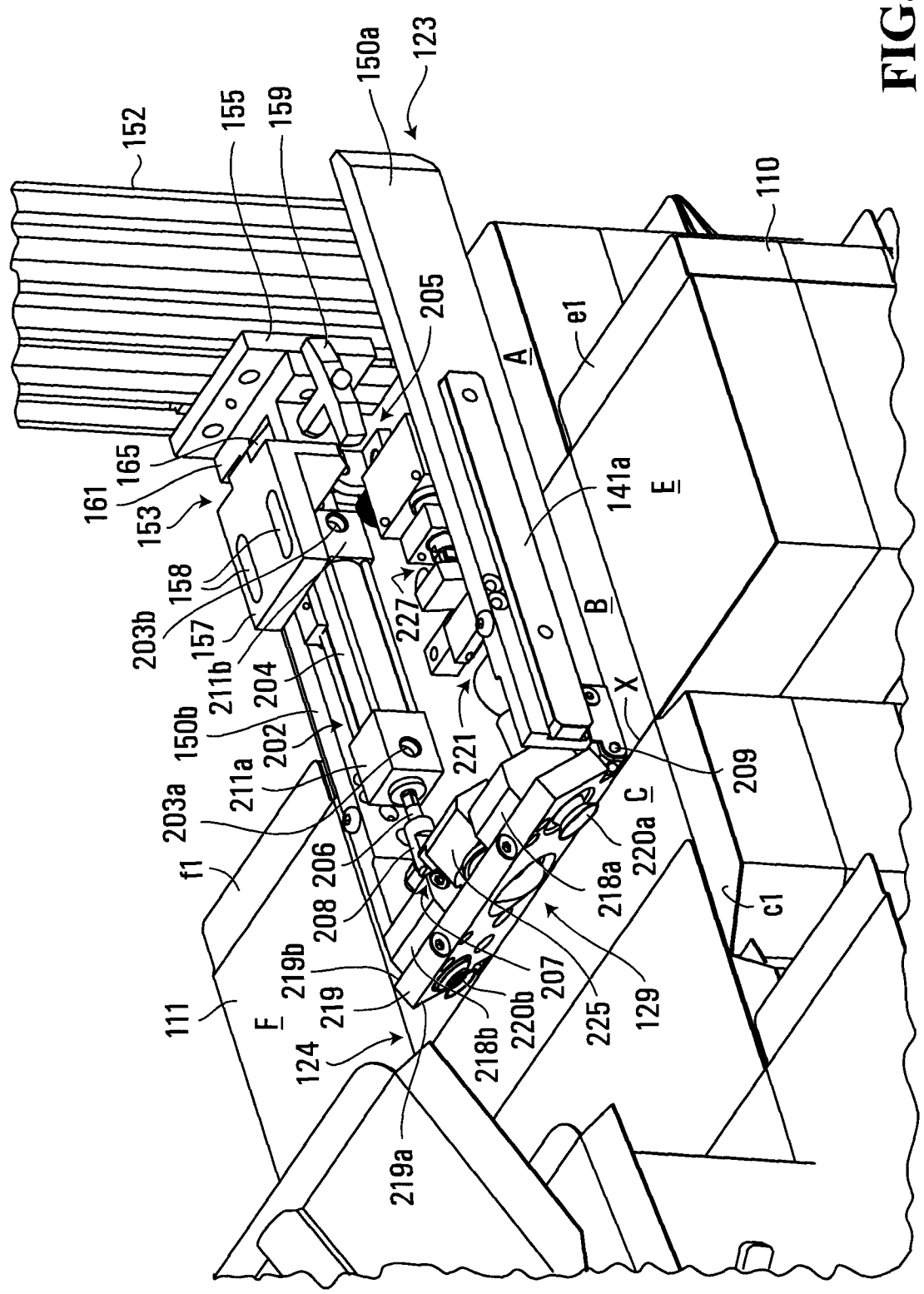
152
155
159
150a
123
110
205
e1
A
165
161
153
141a
E
158
203b
157
227
B
211b
204
150b
202
221
X
209
211a
203a
C
220a
f1
206
218a
208
c1
219b
207
129
111
F
219
220b
225
124
218b
219a

FIG. 9

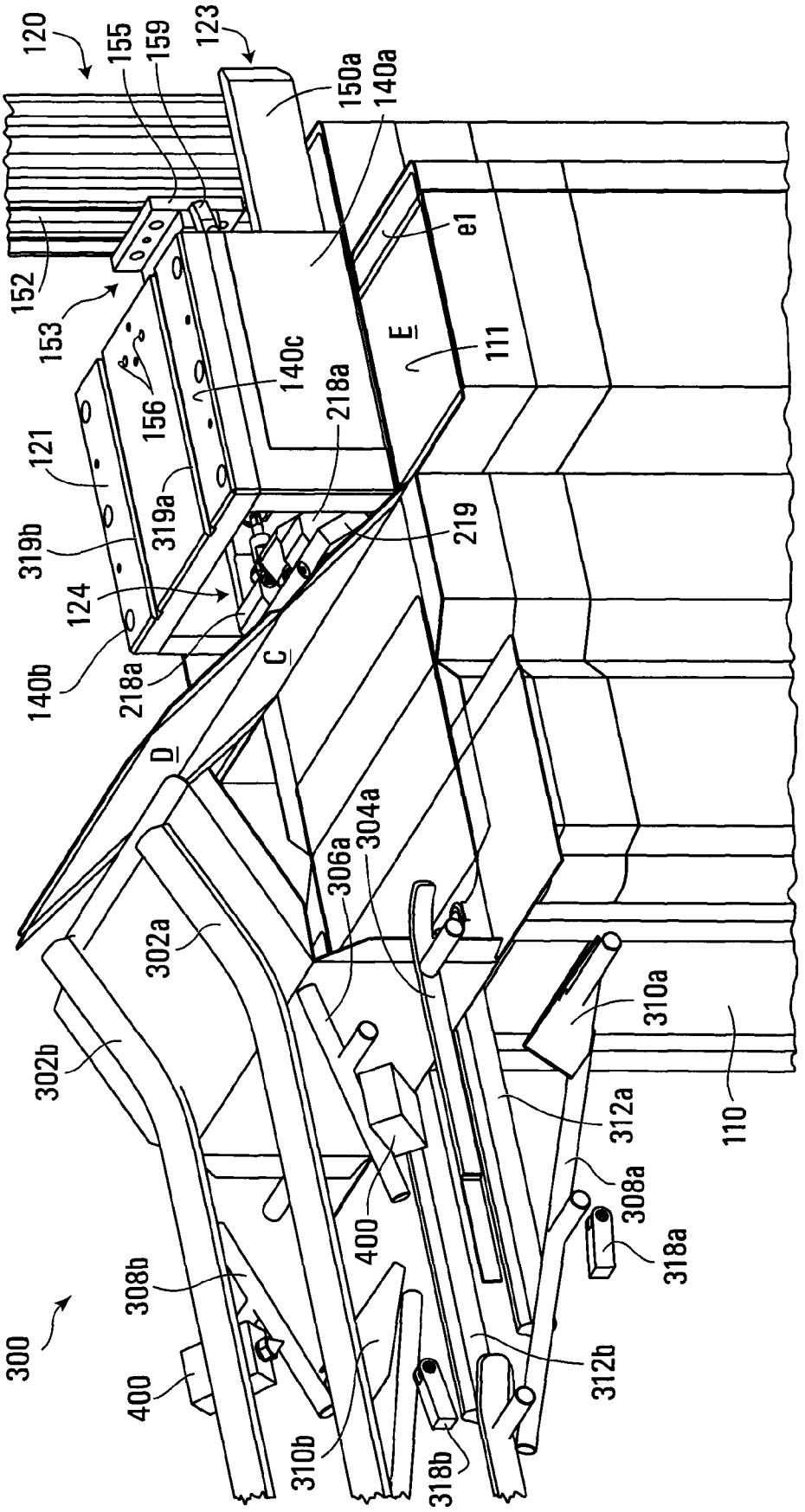
120
155
159
123
150a
140a
152
153
e1
E
111
140c
218a
156
121
319a
219
319b
124
140b
218a
C
D
304a
306a
302a
310a
302b
312a
110
308a
318a
400
308b
400
312b
310b
318b
300

FIG. 10

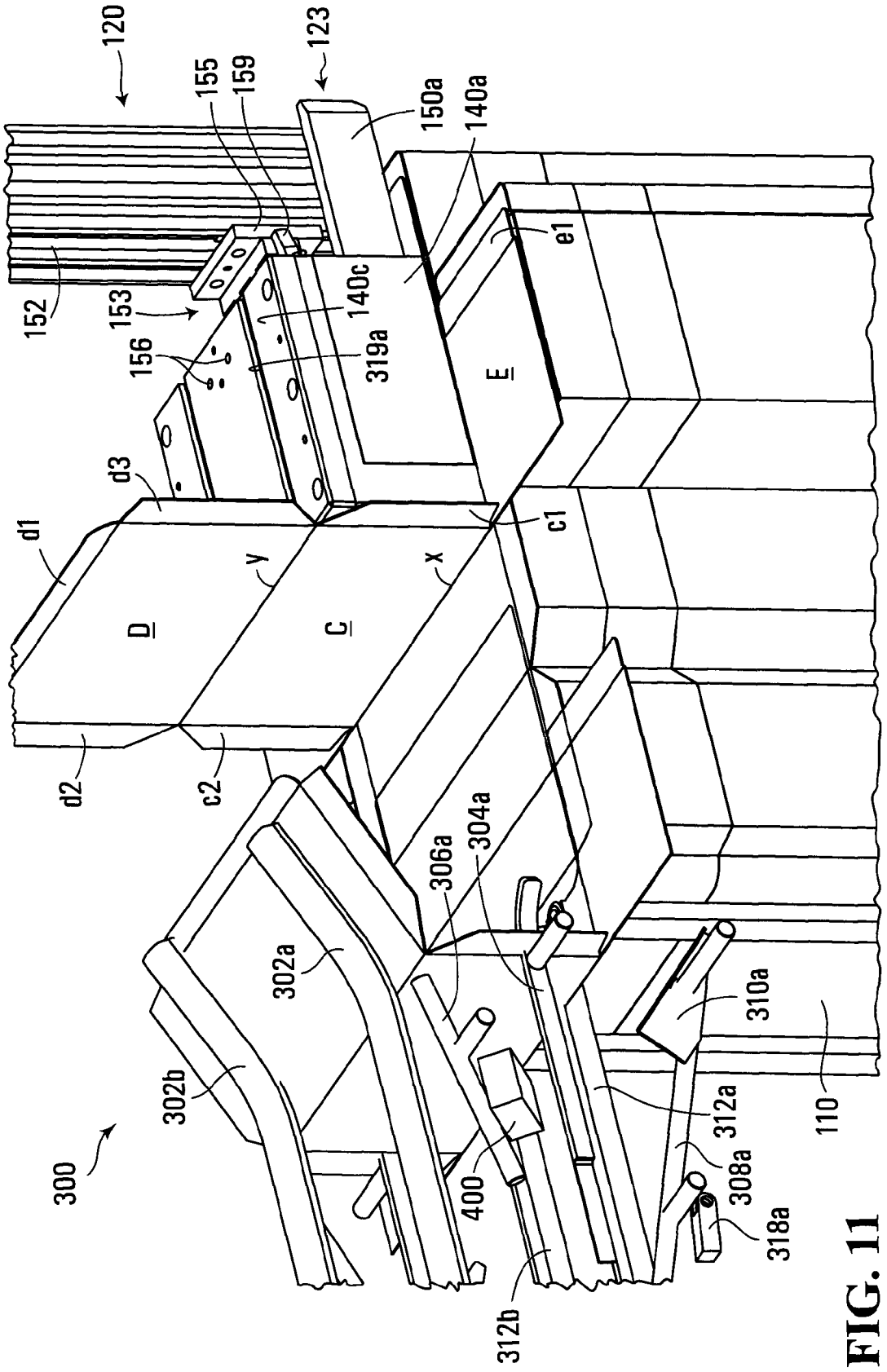
120
155
159
123
150a
140a
152
153
156
140c
319a
e1
E
d3
d1
c1
y
x
D
C
d2
c2
306a
304a
302a
310a
302b
312a
110
300
400
308a
318a
312b

FIG. 11

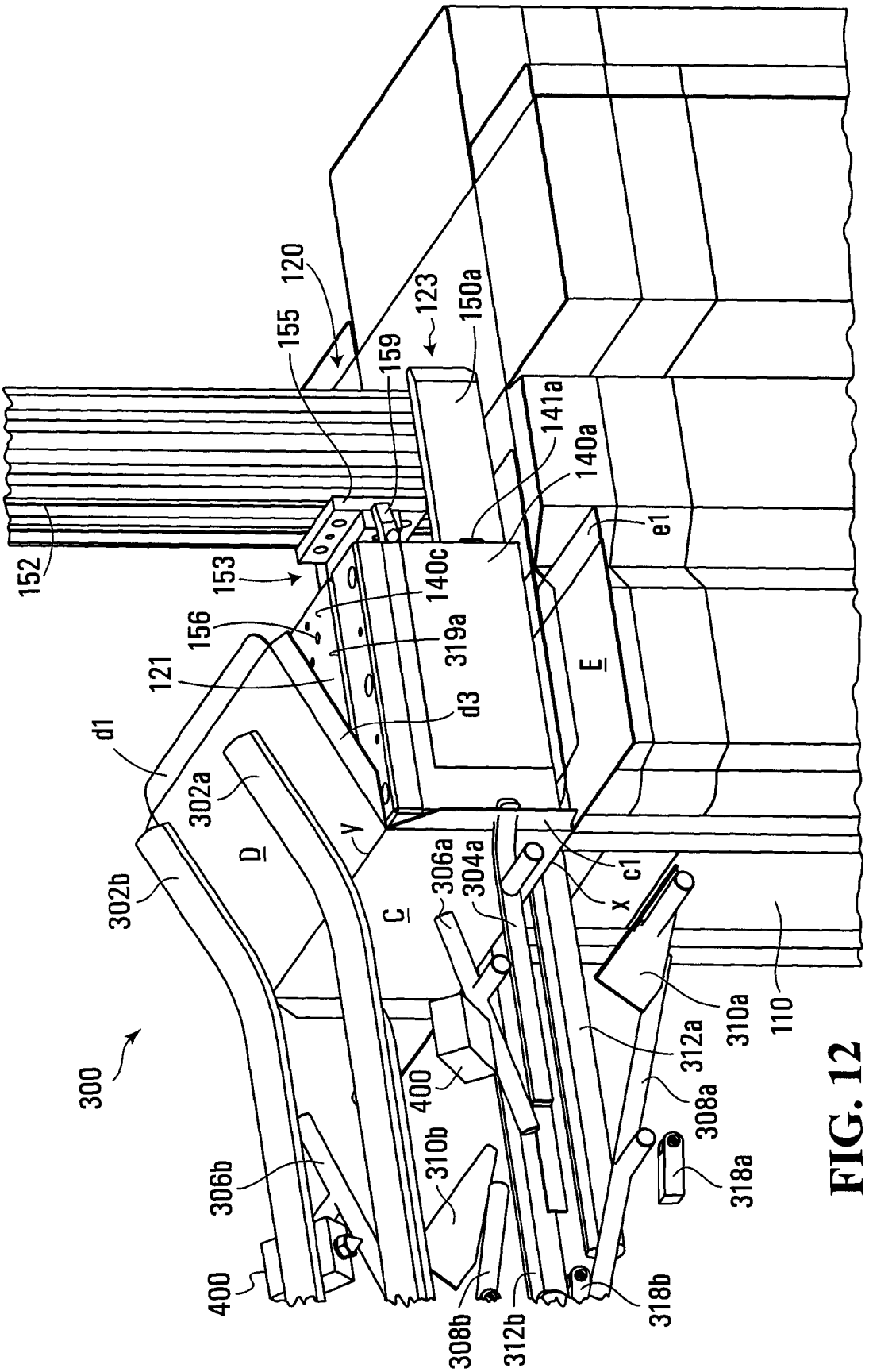
300
302a
302b
D
C
y
d1
121
156
153
152
155
120
159
123
150a
141a
140a
140c
319a
d3
E
e1
c1
x
306a
304a
400
310b
306b
308b
312b
318b
318a
308a
312a
310a
110

FIG. 12

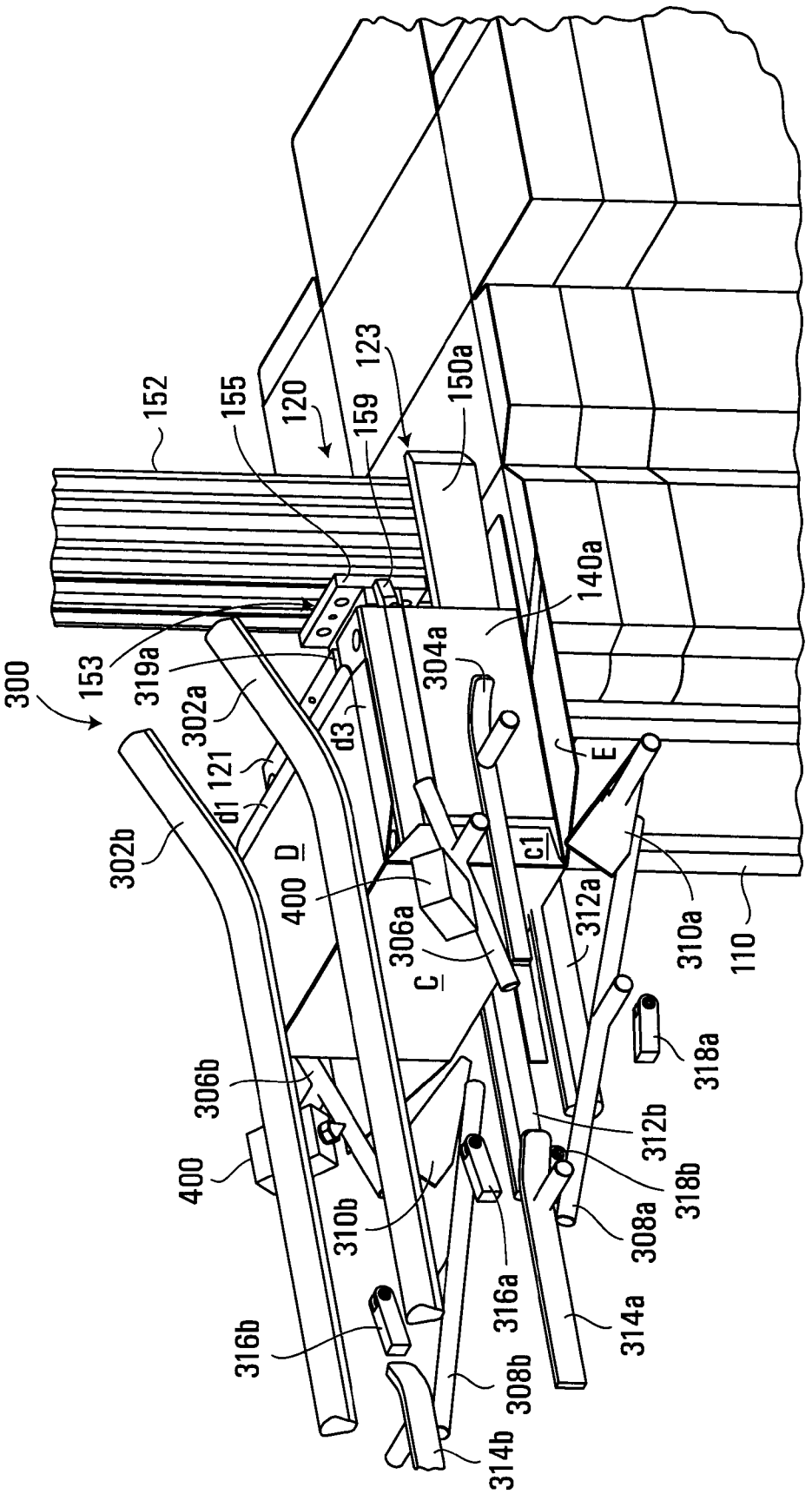
300
152
155
120
159
123
150a
140a
153
319a
302a
304a
d3
121
d1
E
302b
400
D
c1
306a
C
312a
310a
110
318a
306b
312b
400
318b
310b
308a
316a
314a
316b
308b
314b

FIG. 13

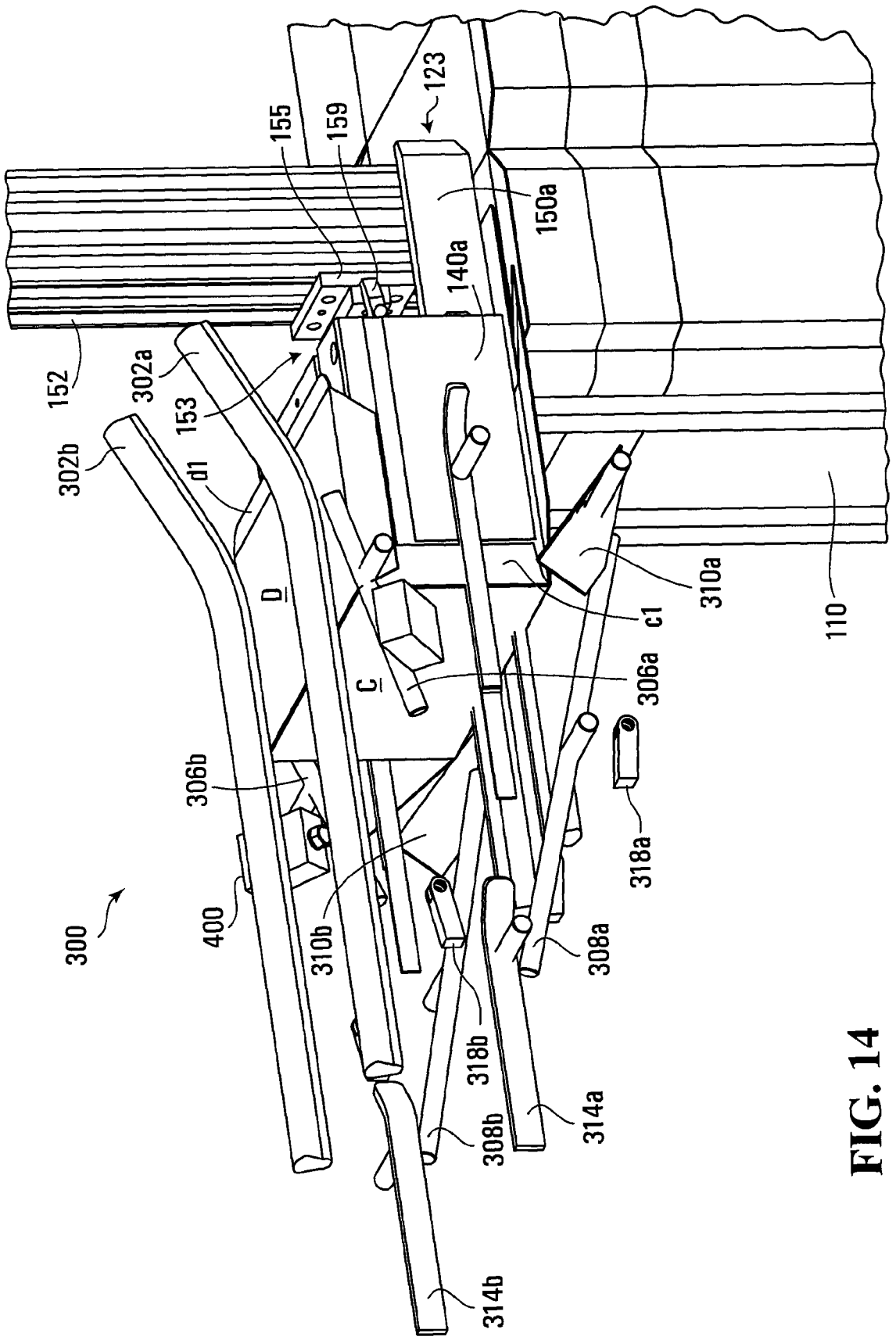
300
400
302a
302b
152
153
155
159
123
150a
140a
d1
D
C
c1
310a
110
306a
306b
310b
318a
308a
318b
308b
314a
314b

FIG. 14

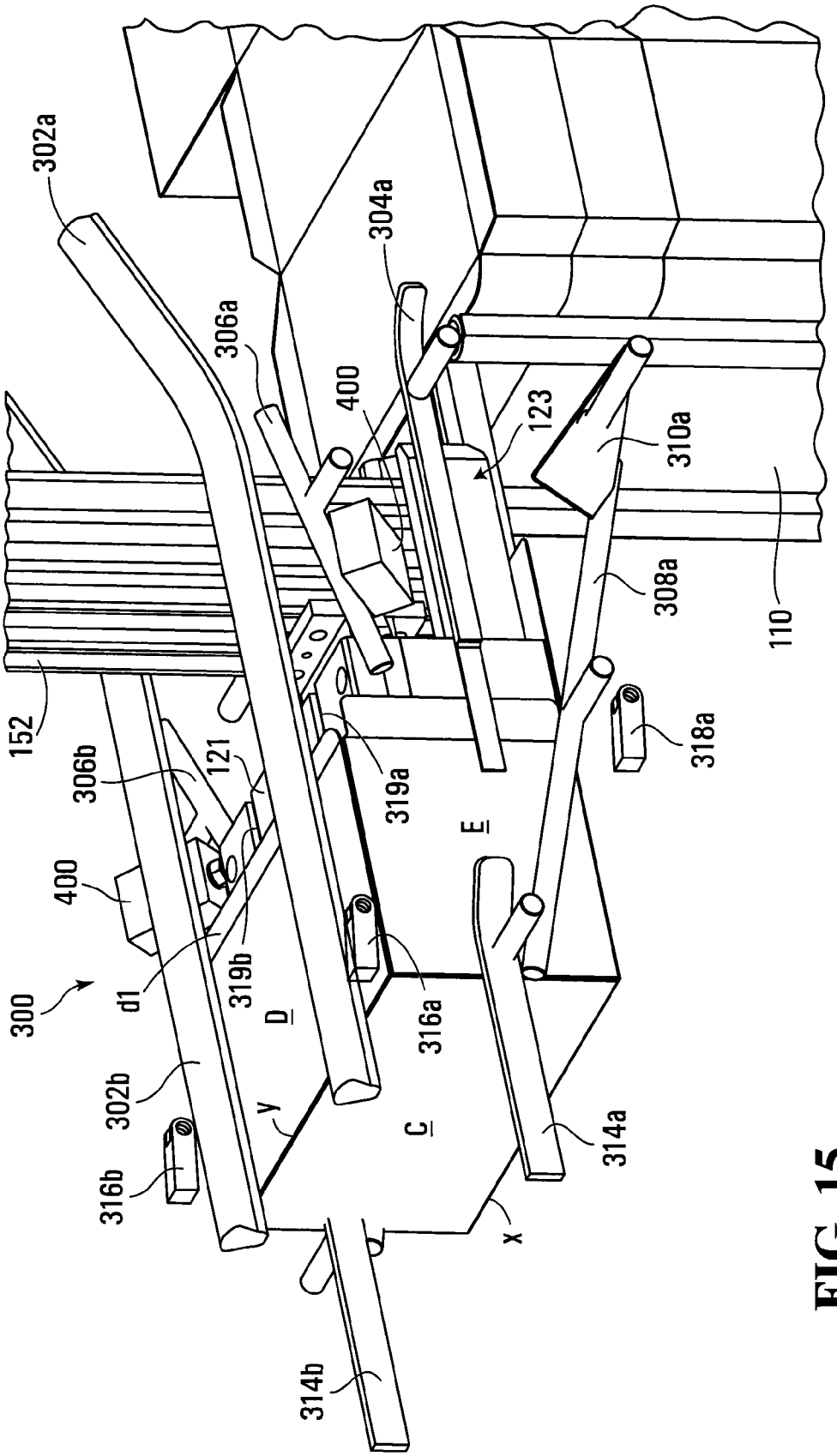
302a
304a
306a
400
123
310a
308a
110
152
306b
121
319a
318a
E
400
300
d1
319b
D
316a
302b
y
C
314a
316b
x
314b

FIG. 15

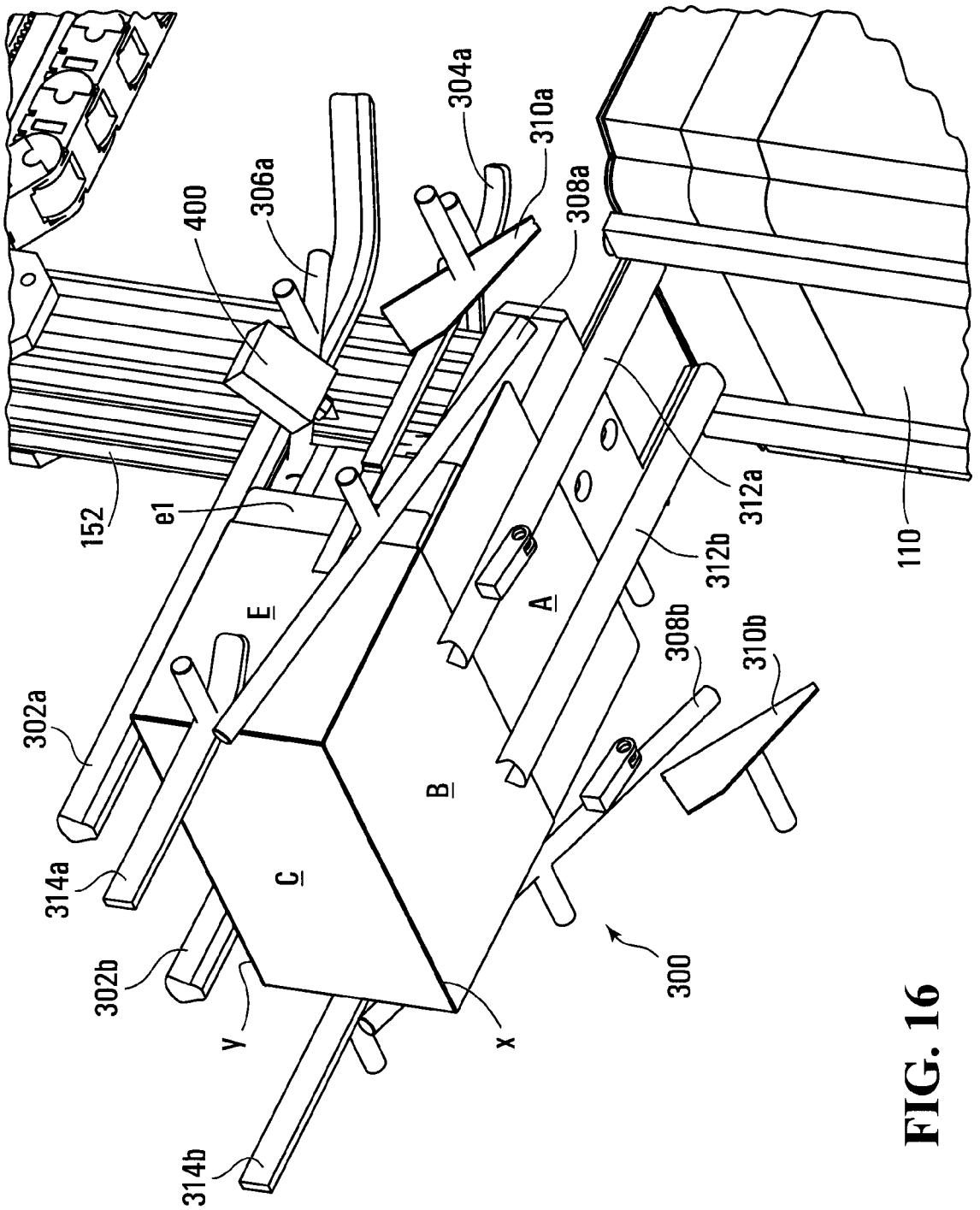
304a
310a
306a
400
308a
152
e1
312a
312b
110
E
A
308b
310b
302a
B
C
314a
302b
y
x
300
314b

FIG. 16

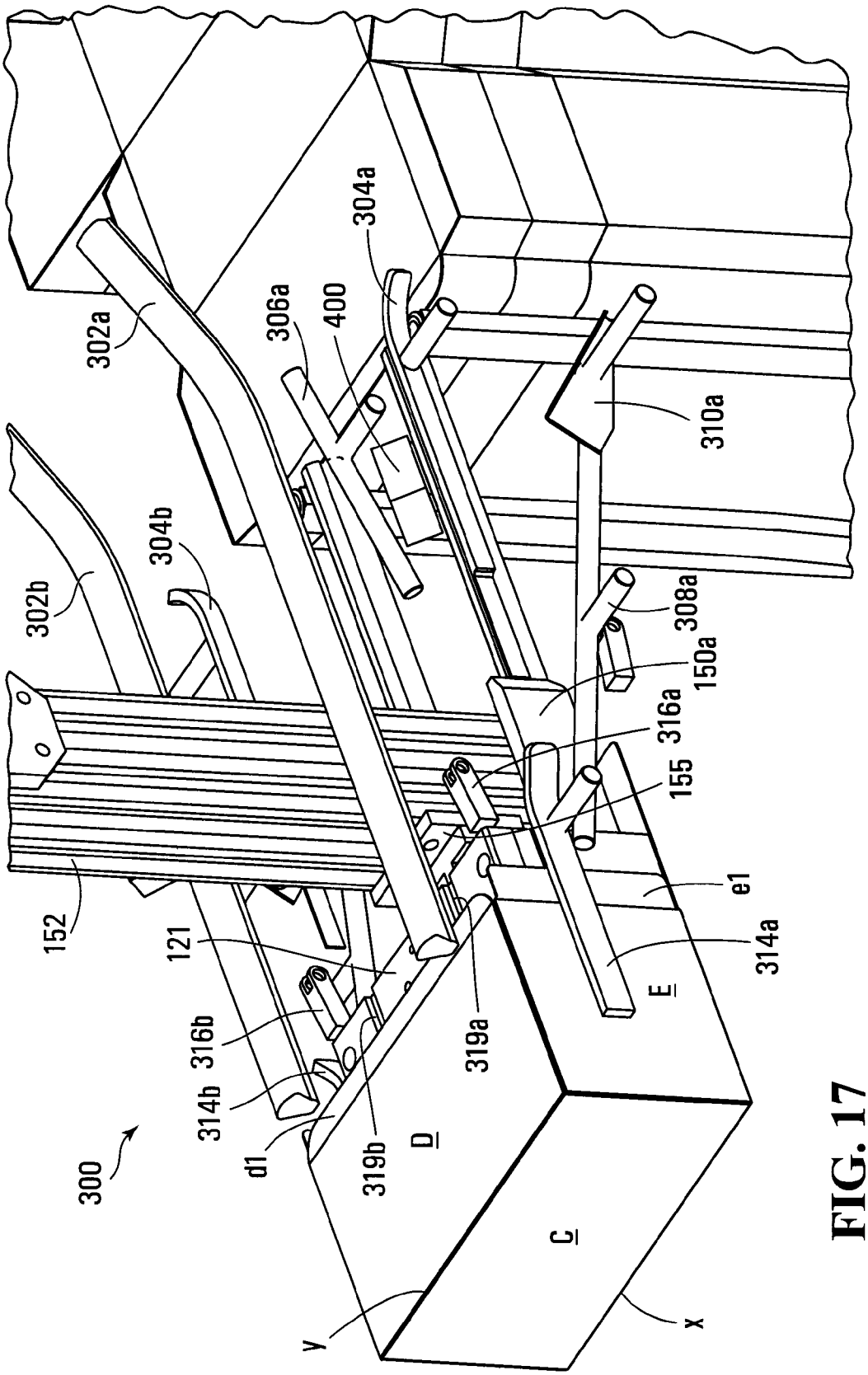
302a
306a
400
304a
310a
302b
304b
308a
150a
316a
155
152
121
e1
314a
316b
314b
319a
d1
319b
D
E
C
300
y
x

FIG. 17

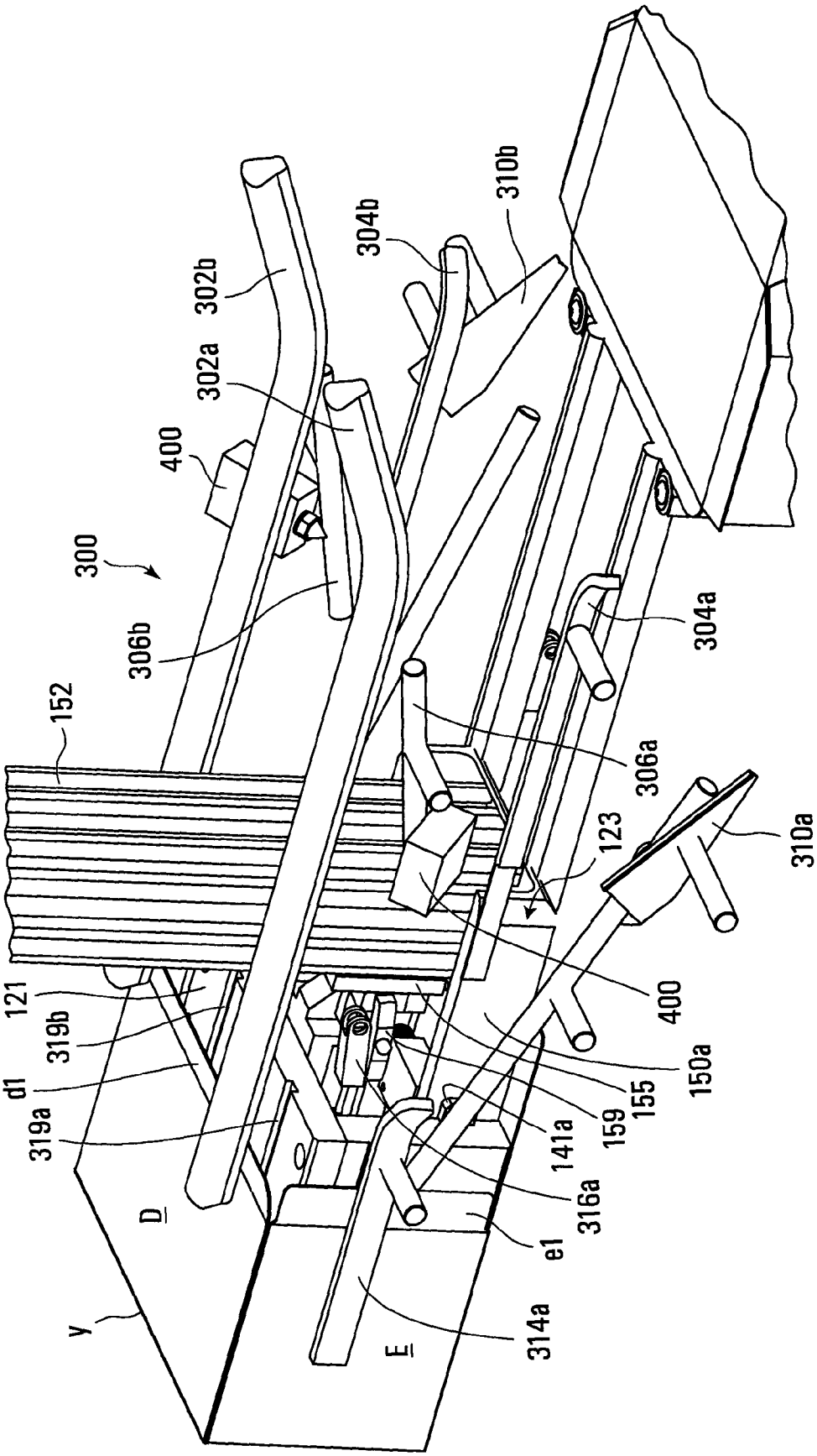
300
302a
302b
304a
304b
306a
306b
310a
310b
400
121
123
150a
152
155
159
141a
316a
314a
319a
319b
d1
e1
D
E
y

FIG. 18

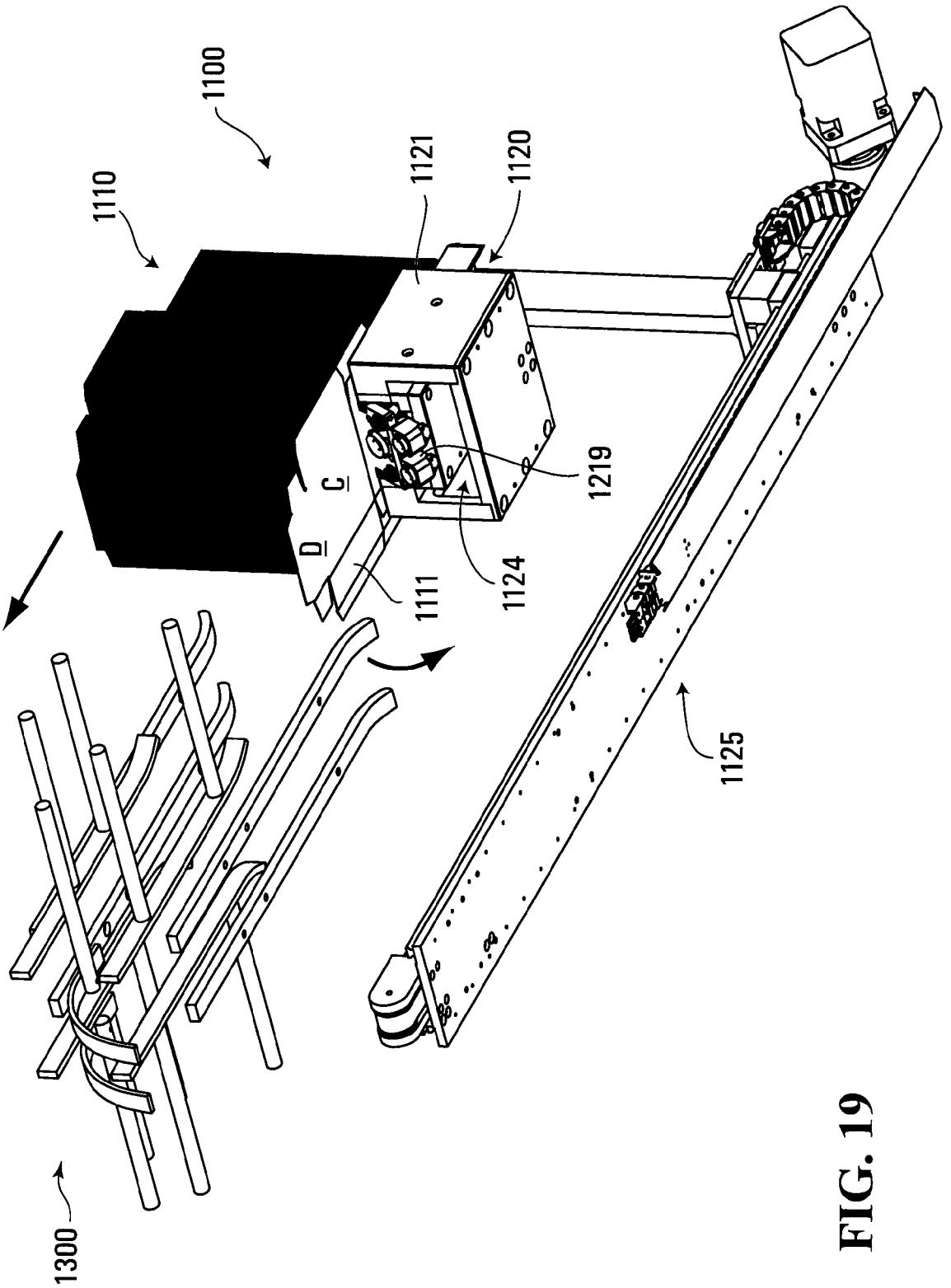

FIG. 19

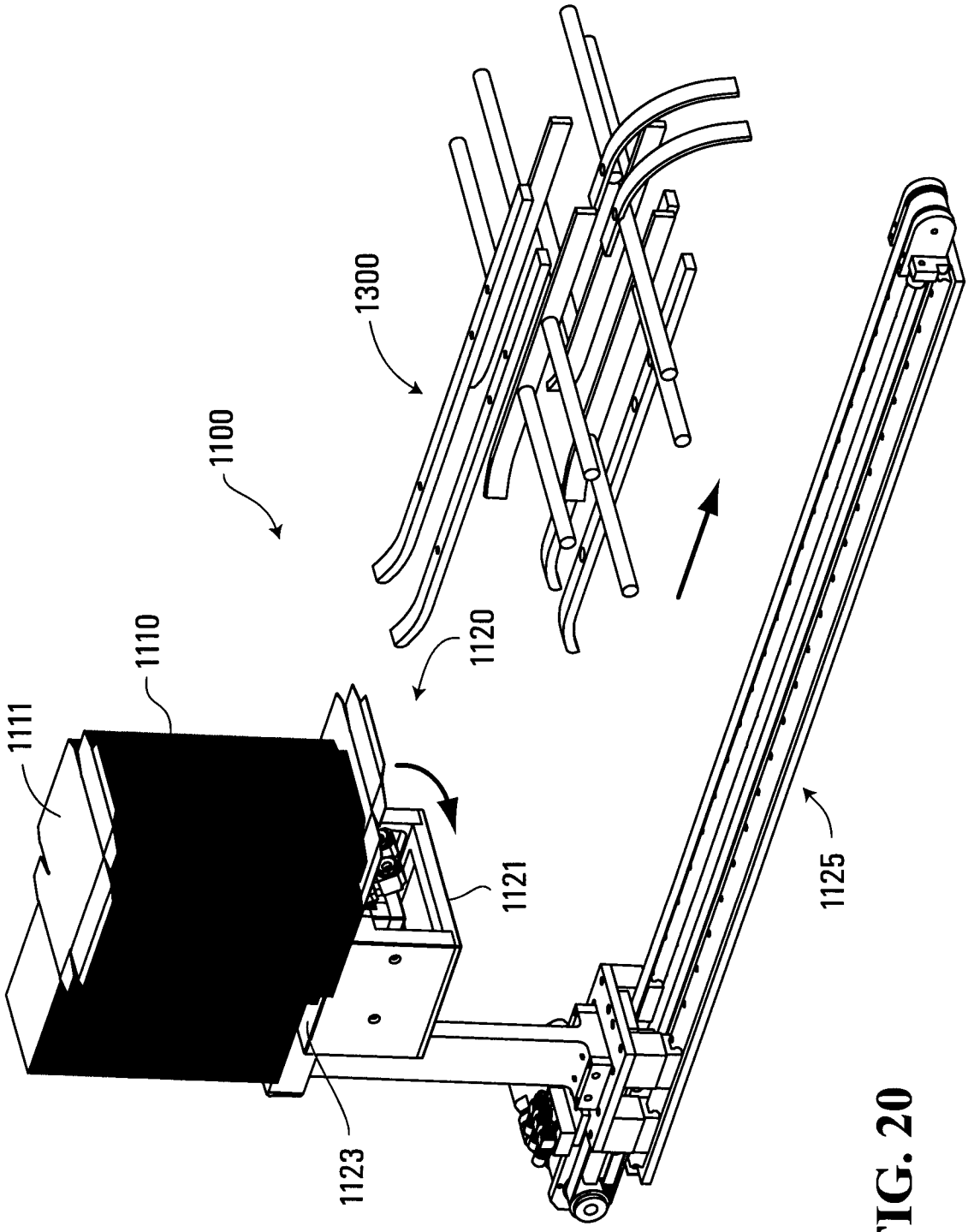

FIG. 20

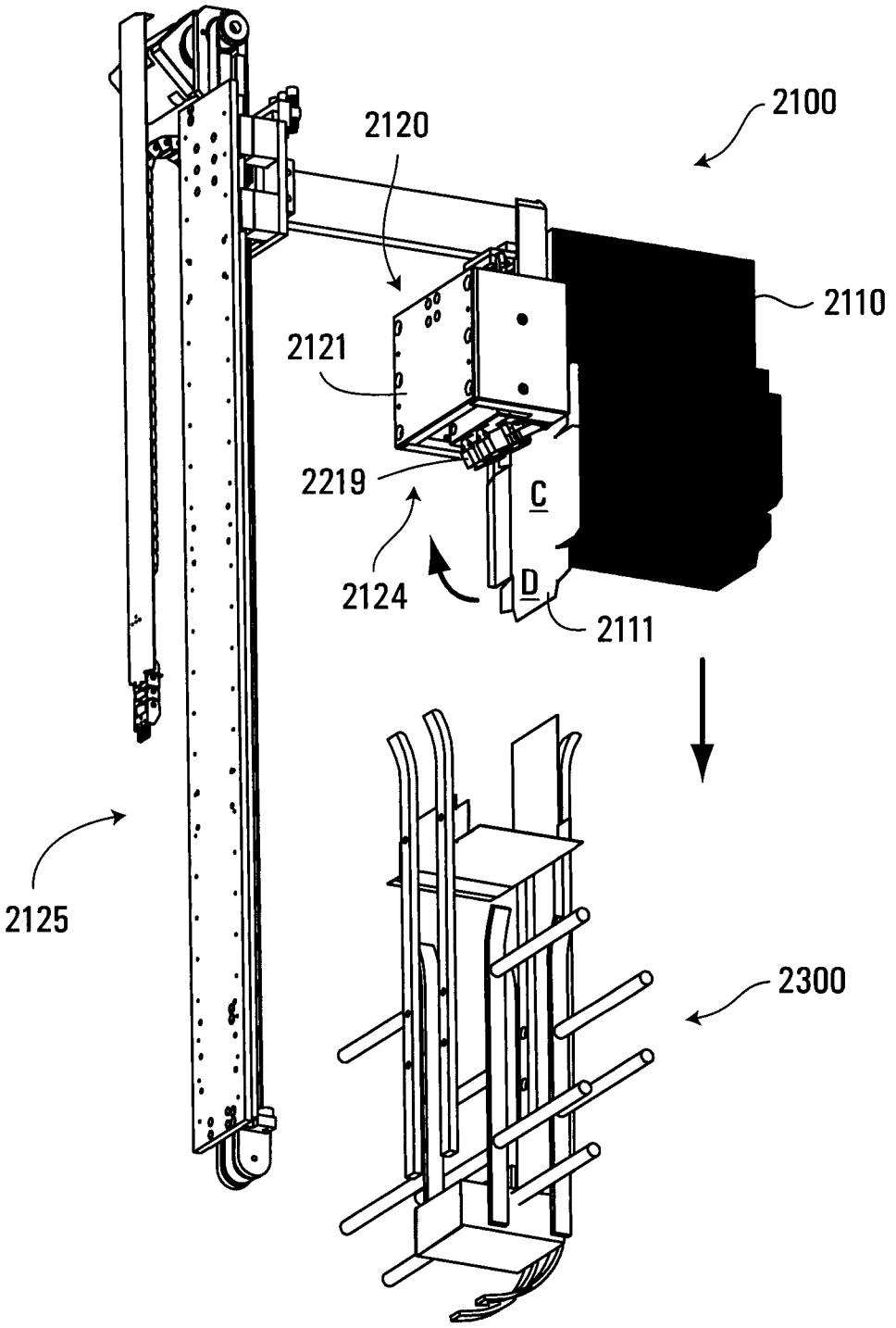

FIG. 21

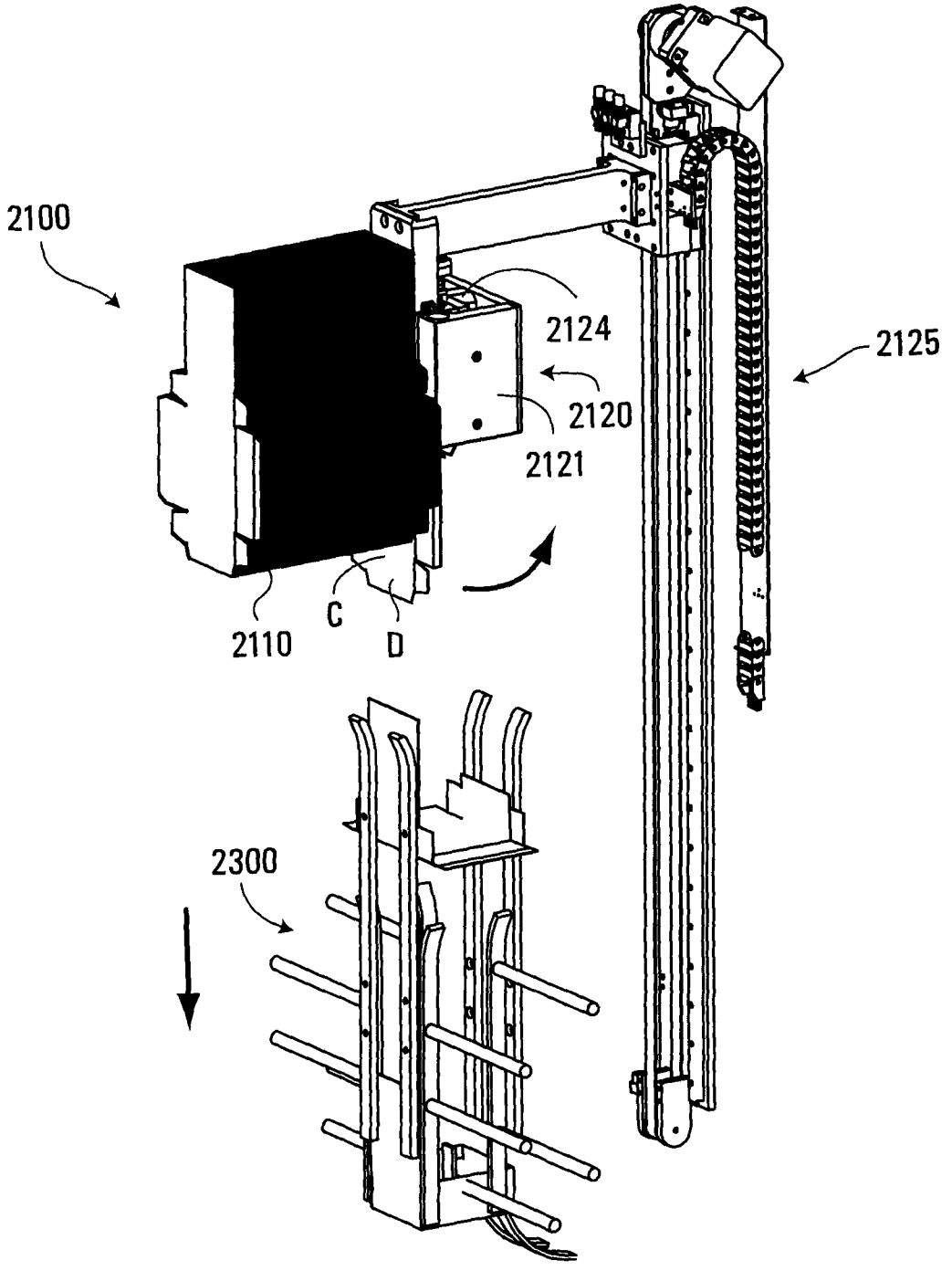

FIG. 22

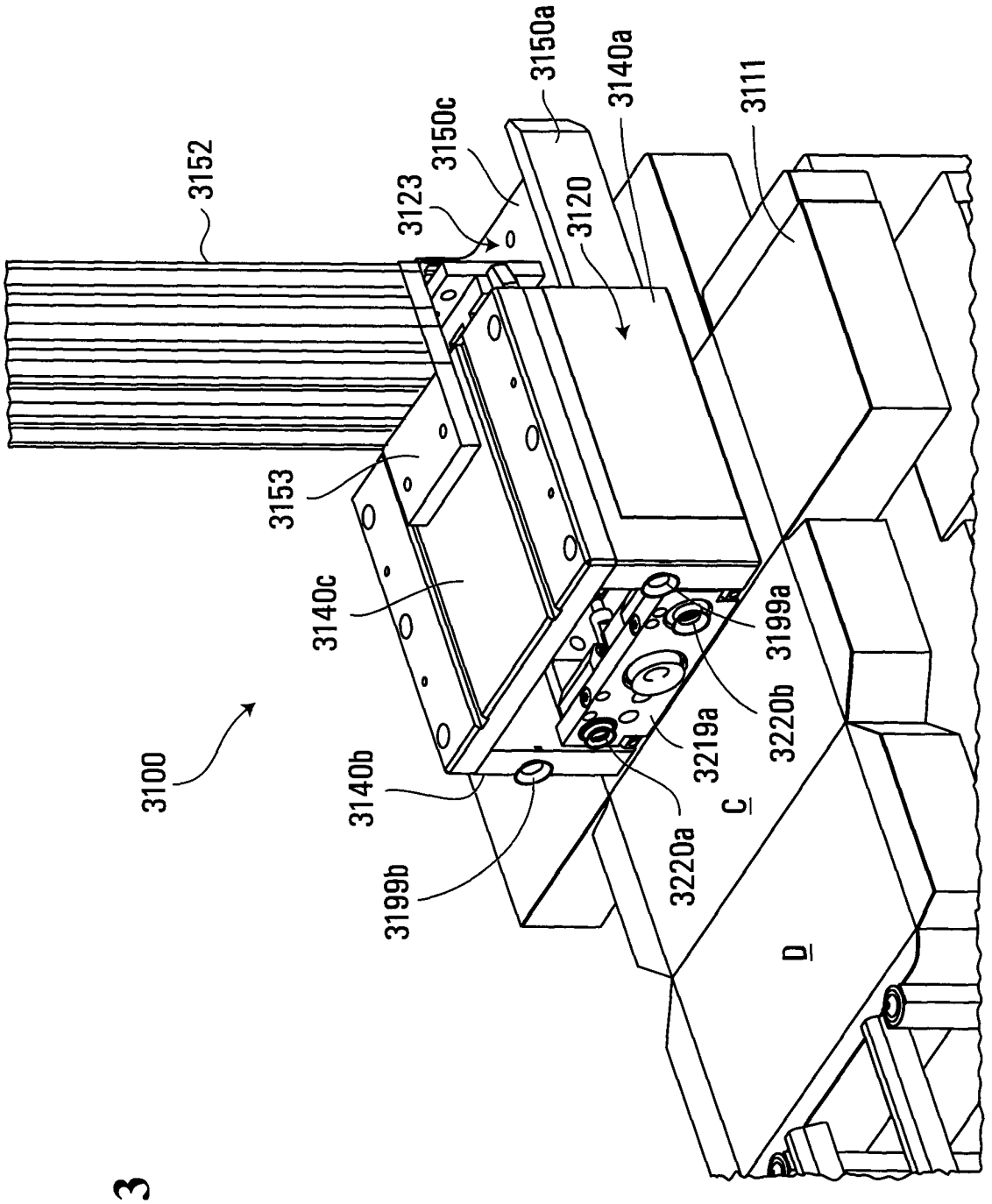
3152
3123
3150c
3150a
3140a
3111
3120
3153
3140c
3199a
3220b
3219a
3100
3140b
C
3220a
3199b
D

FIG. 23

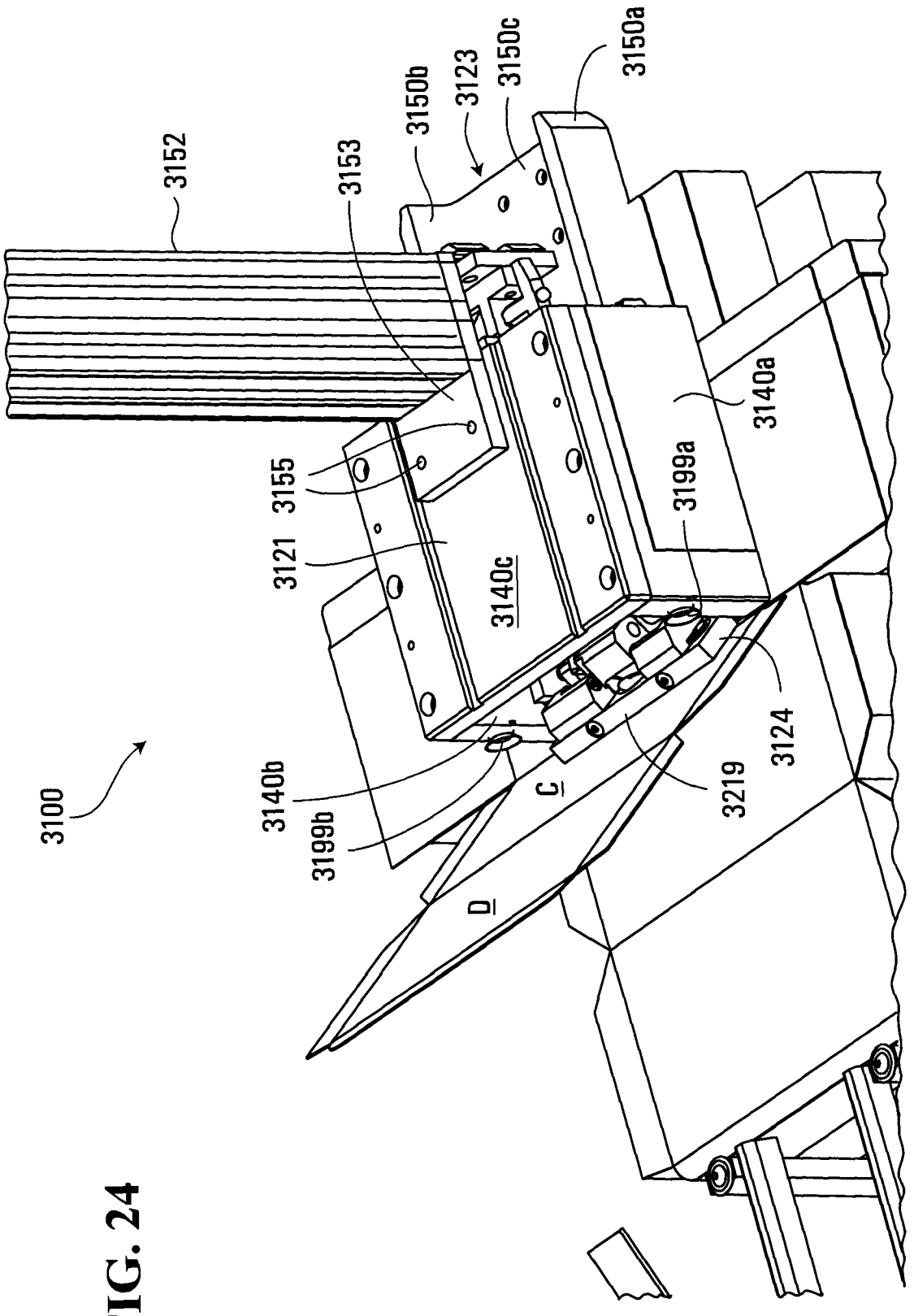
3100
3152
3153
3150b
3123
3150c
3150a
3155
3121
3140c
3140a
3199a
3140b
3199b
C
D
3219
3124

FIG. 24

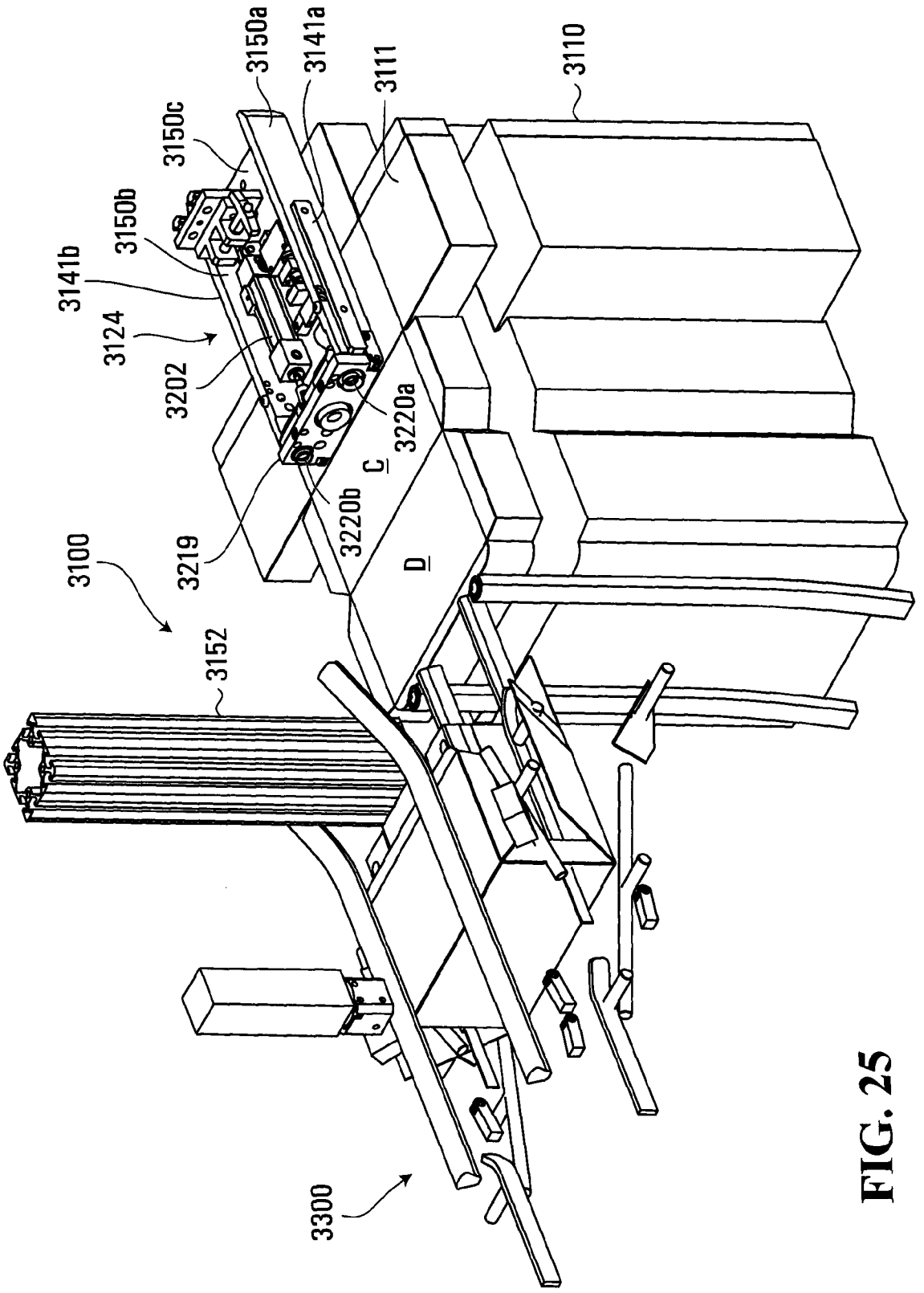
3150a
3141a
3111
3110
3150c
3150b
3141b
3124
3202
3220a
C
3220b
D
3219
3100
3152
3300

FIG. 25

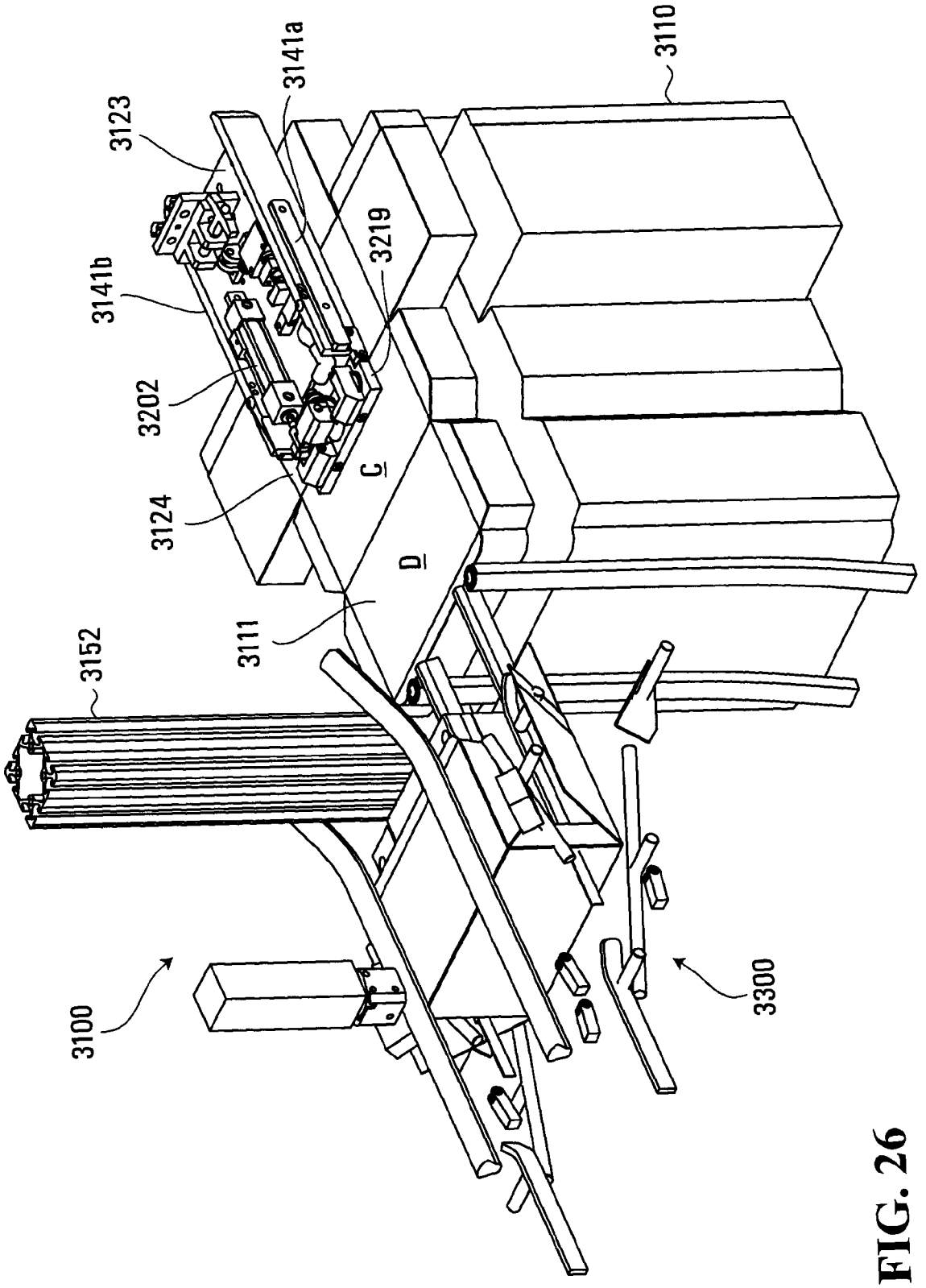

FIG. 26

METHOD AND SYSTEM FOR FORMING A CARTON FROM A CARTON BLANK

RELATED APPLICATION

This application is a National Stage application under 35 U.S.C. 371 of International Application No. PCT/CA2009/001249, filed on Sep. 11, 2009, which claims priority from U.S. patent application Ser. No. 61/136,542 filed Sep. 12, 2008, the contents of which are hereby incorporated by reference herein in their entirety.

FIELD OF THE INVENTION

The present invention relates generally to methods and systems for forming containers, including cartons.

BACKGROUND OF THE INVENTION

Containers are used to package many different kinds of items. One form of container used in the packaging industry is a carton. Cartons come in many different configurations and are made from a wide variety of materials. However, many cartons are foldable and are formed from a flattened state (commonly called a carton blank). Cartons may be made from an assortment of foldable materials, including cardboard, paperboard, corrugated fibreboard, plastic materials, composite materials, and the like and possibly even combinations thereof.

In many known systems, carton blanks may be serially retrieved from a carton magazine, opened up from a flattened state into an erected state, and placed in a slot on a carton conveyor. The erected carton may then be moved by the carton conveyor to a loading station where the carton may be filled with one or more items.

To permit the cartons to be readily opened up into an erected state from a flattened state, the blanks may be held in the magazine in a partially folded configuration and be partially glued along one side seam. Accordingly, each carton may only require opposite panels to be pulled apart to provide a tubular shape that is suitable for delivery to a carton conveyor. The carton can then be filled from the side while on the carton conveyor and any required additional panel folding and gluing can be carried out to enclose and fully seal the carton with one or more items contained therein.

However, such pre-folded and pre-glued blanks are not well adapted to shipping in bulk due to their asymmetric shape—being three layers thick on the glued seam area and only two layers thick elsewhere. Unstable stacking characteristic of such blanks requires the use of secondary containers and also reduces the number of blanks that can be shipped per unit volume. Both of these factors result in increased shipping costs which may be in the order of $8 to $10 per 1000 blanks compared to blanks that can be shipped in a completely flat arrangement. Additionally, some types of items do not lend themselves particularly well to being side-loaded into a carton; rather such products are more readily loaded into the top of an open-top carton. It can also be advantageous to be able to load some products through a relatively large opening, compared to smaller opening in a side-loaded carton.

Some other carton forming systems are adapted to forming a carton that can be top-loaded with a product. In such known systems, a carton magazine may hold a number of blanks that are completely unfolded and unglued and which lie completely flat in a stack in the magazine. However, currently quite complicated systems are required in order to fold and configure the blank so that it is suitable to receive one or more items. One known type of such system involves the use of a specially configured shoe device and associated plunger. A flattened blank can be retrieved from a magazine and then be placed above an opening in the shoe and the plunger can push the blank into a cavity formed in the shoe. The configuration of the shoe is such that various panels that make up the blank will be folded in relation to each other as the blank is pushed into the cavity by the plunger. The result is that a general carton shape is produced that may be further folded and glued to place the carton into a form suitable for delivery to a carton conveyor. Alternatively, the carton blank may be pre-formed with interlocking panels that once the blank is folded within the shoe device, side panels will interlock with each other to form a carton that maintains its form without the use of glue (e.g. "click-lock" carton blanks). Such cartons are formed with open tops. Once delivered to a carton conveyor the carton may be moved to a station where an item can be placed in the carton. Thereafter any required additional panel folding and gluing can be carried out to enclose and fully seal the carton.

However there are also significant drawbacks to these carton-forming systems. For example, a different shoe (and possibly plunger as well) may be required for each different sized/shaped carton blank. Additionally extraction of the formed carton from the shoe may require additional relatively complex machinery. This method of carton forming is also relatively slow and can only form cartons of limited depth.

In the formation of cartons from corrugated fibreboard material, it is also typically necessary as part of the forming process to fold over various parts of a blank made from a corrugated fibreboard material. However, current folding processes and machines are relatively complex.

Accordingly, an improved forming method and system is desirable which can readily form a container such as a carton from a generally flat blank. Furthermore, an improved forming method and system is desirable which can form cartons capable of being top loaded, with deeper trays than conventional "click-lock" formers and at higher rates of speed. Finally, an improved method and system is desirable which can be rapidly modified to accommodate cartons of different sizes and which produces cartons with increased structural stability and leak resistance due to the lack of a seam on the bottom portion of the carton.

SUMMARY OF THE INVENTION

According to one aspect of the invention there is provided a system for forming a carton from a carton blank oriented in a first generally flat orientation. The system comprises a mandrel having a first surface and a second surface oriented generally orthogonal to the first surface, wherein said carton blank has a first portion that can be positioned proximate the first surface of the mandrel apparatus. The system also comprises a first rotating apparatus operable to engage the second portion of the carton blank and rotate the second portion from the first orientation such that the second portion is oriented in a second orientation that is generally orthogonal to the first portion of the carton blank and the second portion of the carton blank being positioned proximate the second surface of the mandrel.

According to another aspect of the invention there is provided a system for forming a carton comprising:

(a) a magazine for storing a plurality of carton blanks in a generally flat configuration;

(b) a mandrel having a first surface and a second surface oriented generally orthogonal to the first surface;

(c) a transfer mechanism for transferring the carton blanks in series from the magazine to the mandrel

(d) a panel holding mechanism for holding a first panel of the carton blank in a first orientation and in a position proximate the first surface of the mandrel;

(e) a panel rotation apparatus operable to engage a second panel of the carton blank and rotate the second panel to proximate to, and generally in the same orientation as, the second surface of the mandrel such that the second panel is oriented in a second orientation generally orthogonal to the first panel.

According to another aspect of the invention there is provided a system for forming a carton from a generally flat carton blank, said system comprising:

(a) a mandrel having a first surface oriented generally at a first orientation and a second surface oriented at a second orientation that is at an angle to the first orientation, wherein the carton blank has a first portion that can be positioned proximate the first surface of the mandrel;

(b) a first rotating apparatus operable to engage the second portion of the carton blank and rotate the second portion of the blank from the first orientation while the first portion is maintained in a position proximate the first surface of the mandrel such that the second portion is oriented in the second orientation that is generally at the angle to the first portion of the carton blank and the second portion of the carton blank being positioned proximate the second surface of the mandrel.

According to another aspect of the invention there is provided a system for forming a carton comprising:

(a) a magazine for storing a plurality of carton blanks in a generally flat configuration;

(b) a mandrel having a first surface oriented at a first orientation and a second surface oriented at a second orientation that is generally orthogonal to the first orientation;

(c) a panel rotation apparatus operable to engage a second panel of the carton blank and rotate the second panel to proximate to, and generally in the same orientation as, the second surface of the mandrel such that the second panel is oriented in a second orientation generally orthogonal to the first panel.

According to another aspect of the invention there is provided a method for forming a carton from a carton blank comprising:

(a) orienting the carton blank in a generally flat first orientation;

(b) rotating a first portion of the blank from the first orientation to a second orientation that is generally orthogonal to the second portion.

According to another aspect of the invention there is provided a method of forming a carton from a carton blank comprising:

(a) providing a carton blank in a first generally flat orientation, the carton blank having first and second portions, the first portion of blank being generally adjacent and parallel to a first portion of a mandrel;

(b) rotating the second portion of the carton blank about the mandrel so the second portion is positioned at a second orientation that is generally orthogonal to the first portion.

According to another aspect of the invention there is provided a method for forming a carton from a carton blank comprising:

(a) orienting a carton blank having first, second and third portions all oriented in a first planar orientation;

(b) rotating first and second portions of the blank from the first orientation to a second orientation while maintaining the third portion in the first orientation;

(c) further rotating the third portion of the carton blank relative to the first and second portions to a third orientation.

According to another aspect of the invention there is provided a method for forming a carton comprising:

(a) Retrieving a carton blank from a magazine storing a plurality of carton blanks in a generally flat configuration;

(b) transferring the retrieved carton blank from the magazine to a mandrel comprising a first surface and a second surface oriented generally orthogonal to the first surface;

(c) positioning a first panel of the carton blank in a first orientation and in a position proximate to the first surface of the mandrel;

(d) engaging a second panel of the carton blank and rotating the second panel to proximate to, and generally in the same orientation as, the second surface of the mandrel such that the second panel is oriented in a second orientation generally orthogonal to the first panel.

According to another aspect of the invention there is provided a method for forming a carton from a carton blank comprising:

(a) orienting a carton blank having a plurality of portions all oriented in a first planar orientation;

(b) rotating a first portion of said plurality of portions from said first orientation to a second orientation while maintaining a plurality of remaining portions of said blank in said first orientation;

(c) orienting the remaining portions of said carton blank relative to said first portion to form a carton adapted for receiving an item.

Other aspects and features of the present invention will become apparent to those of ordinary skill in the art upon review of the following description of specific embodiments of the invention in conjunction with the accompanying figures.

BRIEF DESCRIPTION OF THE DRAWINGS

In the figures which illustrate by way of example only, embodiments of the present invention,

FIG. **1** is a top, left front perspective view of a carton forming system in accordance with a first example embodiment of the present invention, and illustrating the movement of a blank longitudinally through the system;

FIG. **1**A is a plan view of an example carton blank that may be processed by a system as shown in FIG. **1**;

FIG. **2** is a top, right rear side perspective view of the system of FIG. **1**;

FIG. **3** is a top, right rear perspective view of the system of FIG. **1**;

FIG. **4** is a top, left rear perspective view of the system of FIG. **1**;

FIG. **5** is a bottom, right rear perspective view of the system of FIG. **1**;

FIGS. **6** to **18** are various additional perspective views of the system of FIG. **1**, illustrating the sequential forming of a carton from a blank using the system of FIGS. **1** to **5**;

FIGS. **19** to **20** are perspective view of a first alternate system;

FIGS. **21** to **22** are perspective view of a second alternate system; and

FIGS. **23** to **26** are perspective view of a third alternate system.

DETAILED DESCRIPTION

With reference to FIGS. **1-5**, a carton forming system **100** may include a magazine **110** adapted to hold a plurality of carton blanks **111** in a substantially flat orientation. System **100** may also include a mandrel apparatus **120**, a panel rotating apparatus **124**, and a panel folding and guide apparatus **130**. The operation of carton forming system **100** may be controlled by a programmable logic controller ("PLC") **132** (only shown schematically in FIG. **1**). PLC **132** may for example be a model from the Micrologix family made by Allen-Bradley.

With reference to FIG. **1**A, each carton blank **111** may have six side panels A to F, and a plurality of sealing flaps such as flaps **c1**, **c2**; **d1**, **d2**, **d3**; **e1** and **f1**. However, in other embodiments, containers having other side panel configurations can be formed. The panels and flaps are connected to adjacent flaps/panels by predetermined fold/crease lines (shown in broken lines). These fold/crease lines may be formed by a weakened area of material and/or the formation of a crease with a crease forming apparatus. The effect of the fold line is such that when one panel such as for example panel C is bent relative to an adjacent panel such as D or B, the panels will tend to rotate relative to each other along the fold lines (Y, X respectively). Likewise, panels E and B may tend to fold/rotate relative to each other about fold line W and panels F and B may tend to fold/rotate relative to each other about fold line Z. Flaps **d1**, **d2**, **d3**, **c1**, **c2**, **e1** and **f1** may also fold about fold lines that connect them to their respective panels.

As will be described hereinafter, the side panels may be folded to form the desired carton configuration for a top loading carton that can be delivered to a carton loading conveyor. The sealing flaps provide material that can, in conjunction with a connection mechanism (such as for example with application of an adhesive or a mechanical connection such as is provided in so-called "click-lock" carton blanks) interconnect panel/flap surfaces, to join or otherwise interconnect, panels to adjacent panels, to hold the carton in its desired configuration.

Carton blanks **111** may be made of any suitable material(s) configured and adapted to permit the required folding/bending/displacement of the material to reach the desired configuration. Examples of suitable materials are cardboard or creased corrugated fiberboard. It should be noted that the blank may be formed of a material which itself is rigid or semi-rigid, and not per se easily foldable but which is divided into separate panels/flaps separated by creases or hinge type mechanisms so that the carton can be formed.

Magazine **110** may be configured to hold a plurality of carton blanks **111** in a vertically stacked, flat configuration, and be operable to move the stack of carton blanks **111** sequentially upwards under the control of PLC **132**, so that single carton blanks **111** may be retrieved from the stack for processing by a panel retrieval and rotating apparatus generally designated as **124** that forms part of mandrel apparatus **120**. Various specific constructions of a suitable magazine that might be employed in system **100** would be evident to a person skilled in the art. The magazine may comprise basically a large number of carton blanks held in a vertical stack by aluminium rails (the rails are not shown in the drawings). In this configuration where blanks are retrieved from the top of a stack, the stack of blanks in the magazine is moved upwards from the bottom by a PLC controlled motor (not shown in drawings). The purpose of moving the stack of blanks upwards as cartons are formed is so that the top carton is always close against the bottom of the mandrel. The front panels of the top blank are then rotated around the mandrel by the panel rotation apparatus **124**. As cartons are taken and formed, the PLC may move the entire stack up sequentially so that the top carton is always pressed close to the mandrel **121**.

The mandrel apparatus **120** may have several additional components including a mandrel **121**, a mandrel support frame **123** and a mandrel movement and support apparatus generally designated **125**. With particular reference to FIGS. **1**, **10** and **11**, mandrel **121** comprises a pair of opposed, spaced, vertically and longitudinally oriented side plates **140***a*, **140***b* interconnected to and joined by a horizontally oriented top plate **140***c*. A mandrel **121** may be generally configured in a variety of different sizes and shapes, each selected for the particular carton blank **111** that is being formed into a carton. The dimensions of the outer surfaces of mandrel **121** may be selected so that the specific carton blank that it is desired to fold has during the forming process, fold/crease lines that are located substantially at or along the opposite side edges and the upper and lower front edges of mandrel **121**. Such a selection may improve the performance of system **100** in creating a formed carton that is ready for loading with items. System **100** may be configured to permit for the easy interchange of mandrels **121** so that the system can be readily adapted to forming differently sized/shaped cartons from differently configured blanks.

With particular reference to FIGS. **1**, **8** and **9**, mandrel **121** may be supported by mandrel support frame **123**, which may include a pair of spaced opposed elongated and longitudinally extending side plate members **150***a* and **150***b*. Side plates **150***a*, **150***b* may be interconnected by and joined to a lower horizontally oriented plate **150***c*. Side plates **150***a*, **150***b* and lower plate **150***c* may be integrally formed together. Side plates **150***a*, **150***b* may be interconnected to respective side plates **140***a*, **140***b* of mandrel **121**, with mandrel mounting brackets **141***a* and **141***b*, thus providing support for mandrel **121**. Mandrel side plates **140***a* and **140***b* may for example contain a groove or channel on their inner surface for receiving mandrel support brackets or rails **141***a*, **141***b* respectively (see for example FIG. **18**) so that the mandrel **121** can be supported by the mandrel support frame **123** and may be generally restrained from vertical and transverse motion. To assist in securing the vertical and transverse movement, as well as to select the appropriate longitudinal position and restrain the mandrel **121** from longitudinal movement, mandrel top plate **140***c* may be mounted to and above a mandrel support base **153**.

Mandrel support frame **123** may be interconnected and supported by a vertical frame support member **152** (see for example FIGS. **1** and **9**). For example, with reference to FIG. **8**, lower support plate **150***c*, may have screw holes **151** which may enable screws (not shown) to pass upwards through plate **150***c* into threaded holes (not shown) in a lower horizontal surface of vertical support member **152**. Vertical support member **152** may be conveniently formed from a light but relatively strong material that can be readily formed into a tube, such as for example aluminium. Vertical support member **152** may be formed as a hollow channel member that has a longitudinally extending cavity that allows for electrical and communication cables and pressurized/vacuum air hoses to pass through from an upper end to a lower end. In this way, electrical power/communication cable and air hoses can deliver power, electrical signals and air to the mandrel support frame **123** and the panel rotating apparatus **124**.

Mandrel support base **153** may also be interconnected and supported by vertical frame support member **152**, with sup-

port base **153** being mounted to a lower, forward facing surface area of support member **152** by for example bolts/screws.

Vertical member **152** also has an upper end portion that is interconnected to a horizontal connector member **154** for interconnecting the vertical member **152** (and the mandrel apparatus attached thereto) to the mandrel moving apparatus **125**. Connector member **154** may be configured as a plate that interconnects to a corresponding slider plate **160** on mandrel moving apparatus **125**. Connector member **154** may be bolted to plate **160** and may be interconnected to vertical member **152** with bracket support member.

With particular reference to FIG. **9**, mandrel support base **153** is generally L-shaped and has an upper horizontal support member plate **157** and a vertical attachment leg portion **165**. A quick release key bolt member **159** is provided for securing leg portion **165** to a generally U-shaped bracket member **161** that is secured to attachment plate **155** located on a forward facing surface of vertical support member **152**. Key bolt **159** will pass through apertures in bracket member **161** and leg portion **165** of support base **153**. Mandrel top plate **140***c* may be connected to support plate **157** using bolts or screws (not shown) that may pass through apertures **156** in mandrel top plate **140***c* (see FIG. **2**), into longitudinally oriented slots **158** that pass through support plate **157**. Thus, the longitudinal position of mandrel **121** relative to support frame **123** and rotating apparatus **124** can be selected by the appropriate setting of the screws in slots **158**. Quick release key bolt device **159** may be used to provide for the rapid and tool free attachment and release of mandrel **121** to and from vertical frame support member **152**.

Attachment of the mandrel **121** to vertical support **152** via mandrel support base **153** generally restrains mandrel **121** from movement in the longitudinal direction relative to support frame **123** and rotating apparatus **124**.

Mandrel support and moving apparatus **125** may be used to support and move in reciprocating forward and rearward longitudinal movement, mandrel **121**, rotating apparatus **124**, vertical support member **152** and mandrel support frame **123**. The mandrel moving apparatus **125** may be mounted to a support frame (not shown) with a plurality of mounting blocks **166** that are connected to a longitudinally extending guide rail support member **172** of moving apparatus **125**. Also comprising part of moving apparatus **125**, guide slide rails **164***a*, **164***b* may be mounted to opposite side edge faces **172***a*, **172***b* respectively of support member **172**. Slider plate **160** may have mounted thereto, opposed sets of slide blocks **162***a*, **163***a*, and **162***b*, **163***b* (see FIGS. **2** and **4**). Each of the slide blocks **162***a*, **163***a*, and **162***b*, **163***b* may have inwardly facing arcuate surfaces which may engage portions of their respective guide rails **164***a*, **164***b*. Slide blocks **162***a* and **163***a* may be supported by and slide along guide rail **164***a*. Slide blocks **162***b* and **163***b* may be supported and slide along guide rail **164***b*. The slide blocks and guide rails may be made of complimentary materials that allow for smooth and easy sliding of the blocks along the guide rails. For example, slide blocks may be made of aluminium and guide rails **164***a*, **164***b* may be made of stainless steel.

Moving apparatus **125** also includes a mandrel drive device **174** which may include a continuous horizontally oriented drive belt **178** that extends between and rotates around a pulley **176** and a drive wheel **180**. Drive wheel **180** may be driven in both rotational directions and at varying speeds by the drive shaft of a servo drive motor **170**. The operation of drive motor **170** may be controlled by PLC **132** in combination with a position sensing apparatus (not shown) so that PLC **132** can determine when and how to operate drive motor **170** to appropriately position the drive belt **178** and thus moving apparatus **125**. Drive motor **170** may be mounted at an end portion of support member **172** with a vertically oriented connector plate **171**.

To interconnect the drive belt **178** to slider plate **160** and/or sliding blocks **162***a-b*, **163***a-b* known attachment apparatus or mechanisms can be provided. For example, a clamp can be mounted to plate **160** and the belt **178** can be secured between clamp arms of the clamp. Thus, when the drive belt moves longitudinally, in parallel longitudinal, vertical and horizontal alignment with the guide rails **164***a*, **164***b*, the slide plate **160** and sliding blocks **162***a-b*, **163***a-b* can also move in the same direction. The result is that the mandrel support frame **152** and thus mandrel **121** can also be moved longitudinally, in parallel longitudinal, vertical and horizontal alignment with rails **164***a*, **164***b*.

Also associated with moving apparatus **125** is a caterpillar device **199**. Caterpillar **199** has a hollow cavity extending along its length. Within the cavity of caterpillar **199** hoses carrying pressurized air/vacuum and electrical/communication wires can be housed. Caterpillar **199** allows such hoses and wires to move longitudinally as the mandrel support member **152** and thus mandrel **121** and mandrel support frame **123** are moved longitudinally by moving apparatus **125**. The hoses and wires may extend from external sources to enter at an inlet **199***a* of caterpillar **199** and emerging at an outlet **199***b*. Once leaving outlet **199***b*, the hoses and wires may pass into the internal cavity of vertical member **152** (see FIG. **2**). An example of a suitable caterpillar device that could be employed is the E-Chain Cable Carrier System made by Ignus Inc.

The next component of system **100** to be described in detail is the panel rotating apparatus **124**. Panel rotating apparatus **124** may engage one blank **111** and may be employed to rotate one or more panels of blank **111** relative to one or more other panels. For example, as illustrated in FIGS. **9-11**, panels C and D of a blank **111** are rotated approximately 90 degrees relative to panels A, B, E and F, from a generally flat orientation to a generally vertical orientation. Panel rotating apparatus **124** may include a panel rotation unit **129**. The movement of unit can be controlled by PLC **132** in such a manner that it can rotate so as to move a panel C (and panel D which is attached to an end of panel C) of a carton blank **111** through a rotation of approximately 90 degrees, in an aligned manner, at an appropriate time, as is illustrated for example in FIGS. **9**, **10** and **11**.

Unit **129** will be described in detail, and with particular reference to FIGS. **7**, **8** and **9** which for simplicity depict system **100** without mandrel **121**. The unit **129** may include a longitudinally oriented piston device **202** which has piston blocks **211***a*, **211***b* that rest on bottom plate **150***c*. Piston block **211***b* has a vertical attachment leg portion **212**. A mounting block **205** with opposed generally vertical longitudinally oriented plates **214***a*, **214***b* and generally horizontal transversely oriented plate **215** is positioned at and connected to a rear end of reciprocating piston **202** with a screw (not shown) that passes through an aperture in leg portion **212** (not shown) and apertures **213***a*, **213***b* in vertical plates **214***a*, **214***b* respectively. Mounting block **205** is also mounted to plate **150***c* with screws (not shown) that pass through apertures **210** in horizontal plate **215** into the plate **150***c*.

Piston **202** may be a conventional pneumatic reciprocating cylinder **204** and is operable to move in a reciprocal movement between a fully extended position (not shown) and a retracted position as shown in FIG. **8**. This reciprocating motion can be achieved in known ways such as for example, by using a double acting cylinder, which can for example, channel compressed air to two different chambers which in

turn provides interchanging forward and backward acting forces on the piston **202**. Piston **202** may for example be a DSNU made by Festo. Compressed air may be delivered to piston **202** by hoses (not shown) passing from vertical support member **152** out to connect with apertures **203***a*, **203***b*.

To channel the compressed air appropriately, valves (not shown) can be driven between open and closed positions by solenoids responsive to signals from PLC **132** (FIG. **1**). The valves could be located proximate the piston **202** or be disposed elsewhere. Electrical lines carrying signals from PLC **132** could also pass through vertical member **152** to operate the valves.

A piston rod **206** of piston **202** is provided with an extended arm portion **208** that provides for a hinge connection **207** for pivoting the panel rotating apparatus **124** between a generally horizontal position and a generally vertical position.

Panel rotation apparatus **124** also comprises panel rotating plate **219** with outer and inner face **219***a* and **219***b* respectively. Panel rotating plate **219** may be attached by way of piano hinge **209** to forward lower extensions of side plates **150***a*, **150***b* of mandrel support frame **123**. As a result of the movement of piston **202** the cylinder rod **206**, will extend or retract allowing the arm **208** to pivot relative to rotating apparatus **124**. The movement of piston rod **206** thus causes the panel rotating plate **219** to rotate through a certain angular distance relative to mandrel **121** around piano hinge **209**.

Air suction cups **220***a* and **220***b* may be fixedly mounted to outer or forward facing face **219***a* of panel rotating apparatus plate **219** with mounting block units **218***a*, **218***b* respectively. Air suction cups **220***a* and **220***b* may be interconnected through block units **218***a*, **218***b* to a source of vacuum by providing for an air channel linked to a manifold unit **225**. The manifold unit **225** may in turn may be interconnected by air vacuum supply hose (not shown) to a pressurized air distribution unit generally designated **227**. Unit **227** may include a plurality of valves that may be operated by PLC **132** and may also include a vacuum generator apparatus **221**. If a vacuum generator is utilized, pressurized air may be delivered from an external source through vertical support member **152** to unit **227**. The vacuum generator will then convert the pressurized air to a vacuum that can then be delivered to suction cups **220***a*, **220***b*.

The air suction force that may be developed at the outer surfaces of suction cups **220***a* and **220***b* of unit **124** may be sufficient so that when activated they can engage, hold and rotate panel C of a blank **111** from a generally horizontal position to the position shown in FIG. **11**. The vacuum generated at suctions cups **220***a* and **220***b* can also be de-activated by PLC **132**.

The suction cups **220***a* and **220***b* of unit **124** may engage the surface of panel C. In other embodiments suction cups of rotation units may alternatively, or in combination also, engage panel D. The particular arrangement of suction cups on rotating plate **219** can be designed based upon the configuration of the carton blank and the particular panels that need to be rotated. It will also be appreciated that in the panel rotation apparatus **124**, suction cups are used to apply a force to hold and/or move a panel of a carton blank. However alternative engagement mechanisms to suction cups could be employed. It should also be noted that a second set of suction cup/suction plates mounted for movement, including pivoting movement, could be deployed to perform additional panel folding or movement and/or holding of the panel and blank.

More generally, other types of apparatus may be employed to transfer a blank **111** to the mandrel apparatus **120**, such that one portion of the blank may be rotated, preferably about ninety degrees, relative to another portion of the panel, to set-up the folding process using a folding apparatus.

With particular reference to FIGS. **13-18**, system **100** may also include a panel folding and guide apparatus **130**, that may be a rail and plough apparatus generally designated **300**. Rail and plough apparatus is configured to cause the appropriate panel and sealing flaps of a blank **111** to be appropriately folded and sealed to produce a carton configuration that is suitable for delivery to a carton conveyor (not shown). Apparatus **300** may, as shown in the figures, include a plurality of rails and plough devices. Each of the rails and plough devices of apparatus **300** may be supported by rods or bars interconnected to a support frame (not shown for simplicity in the figures).

Apparatus **300** may include a pair of spaced, longitudinally extending overhead rails **302***a*, **302***b* configured and positioned so that as blank **111** is moved longitudinally forward by mandrel apparatus **120**, rails **302***a*, **302***b* may fold panel D and attached flaps d**1**, d**2** and d**3**, from a generally vertical orientation to a generally horizontal orientation. Apparatus **300** may also include a pair of opposed wedge plough devices **310***a*, **310***b* that may be configured and positioned so that as blank **111** is moved longitudinally forward by mandrel apparatus **120**, plough devices **310***a*, **310***b* can commence the generally inward folding of outer panels E and F respectively from a generally horizontal orientation towards a generally vertical orientation.

A pair of opposed inner side rails **304***a*, **304***b* are configured and positioned to engage flaps c**1** and c**2** respectively and may fold and maintain the flaps c**1** and c**2** in a rearward longitudinal direction, until outer panels E and F have been brought into an upward vertical and overlapping relationship.

Also part of apparatus **300** are a pair of opposed, upwardly and inwardly oriented guide rails **308***a*, **308***b*, that are configured and positioned to take over from plough devices **310***a*, **310***b*, to engage the lower surfaces of panels E and F and to complete the inward folding of outer panels E and F respectively to a vertical position.

A pair of opposed, generally downwardly and inwardly oriented guide rails **306***a*, **306***b* are configured and positioned to provide inward and downward folding of flaps d**2** and d**3** respectively to a vertical position as blank **111** continues the movement longitudinally. Also, a pair of lower support rails **312***a* and **312***b* are positioned to assist in supporting blank **111** once it has been removed from the support of the stack of blanks **111** in the magazine **110**.

It should also be noted that during the forward longitudinal movement of blank **111** as it is pushed by mandrel apparatus **120** through the positions illustrated in FIGS. **15-18**, opposed adhesive compression rails **314***a*, **314***b* which are configured and positioned to apply pressure to the side panels of the formed carton, to ensure appropriate sealing of the flaps and panels with the adhesive.

Adhesive applicators such as applicators **400** can be appropriately positioned and their operation may be controlled by PLC **132**. Applicators **400** can apply a suitable adhesive to various panels and/or flaps so that when the panels and flaps are folded as described herein, the panels and flaps can be held in the desired carton configuration. An example of a suitable applicator that can be employed is the model ProBlue 4 applicator made by Nordson Inc. An example of a suitable adhesive that could be employed with on a carton blank **111** made of cardboard is Cool-Lok adhesive made by Nacan Products Limited.

Also with particular reference to FIGS. **14** and **15**, associated with rail apparatus **300** are opposed pairs of upper latch devices **316***a*, **316***b* and lower latch devices **318***a*, **318***b*. The

latch devices **316***a*, **316***b* may be gravity driven or spring loaded finger latches which permit one way movement of configured cartons. Top plate **140***c* of mandrel **121** may be inscribed with grooves **319***a* and **319***b*, and similarly the lower facing surface of lower support plate **150***c*, may also be inscribed with corresponding grooves (not shown). As the carton blank is pushed forward, the latches are pushed by panels D, B and A to positions allowing the carton blanks to pass the upper latch devices **316***a*, **316***b* and lower latch devices **318***a*, **318***b*. However, once the rear edges of upper panel d**1** and lower panel A have passed the upper and lower latches respectively, the latches will fall into the respective grooves. This will then prevent rearward movement of the configured blank **111***a* and allow for retraction of mandrel **121** without physical impairment by upper latch devices **316***a* and **316***b* or lower latch devices **318***a*, **318***b*. It will also be appreciated that other known types of mechanisms could be deployed that would restrain the blank from rearward movement, when the mandrel apparatus is starts to move backwards and disengages from the blank to return to its start position where the next blank can be retrieved from magazine **111**. For example, additional suction cups could be used that are controlled by valves and PLC **132** and that are positioned to engage and hold the blank (which has become a formed carton) in position during disengagement of the mandrel **121** from the formed carton.

Various components of system **100** such as mandrel **121**, mandrel moving apparatus **125**, panel rotating apparatus **124** and mandrel support frame **123** may be made of suitable materials such as for example mandrel **121** may be made from aluminium. Also a least some of the various components of system **100** such as mandrel **121** and support frame **123** may be integrally formed or interconnected to each other by known techniques. For example if the components are made of a suitable metal or plastic, welding techniques can be employed. Also, the use of screws and/or bolts may be employed.

The operation of system **100** will now be described in detail. First, magazine **110** may be raised so that the upper generally horizontally oriented surface of the upper-most blank **111** is just in contact with, or is a very short distance spaced from (e.g. within ¼ inch) the bottom surfaces of mandrel support frame **123** and mandrel **121**. Next, magazine **110** and panel rotating apparatus **124** may co-operate so that the single blank **111** from the top of the stack of carton blanks may be retrieved from the magazine **110** and be transferred to the mandrel apparatus **120**. Thus, in this way the panel rotating apparatus **124** may also serve as a transfer mechanism for transferring carton blanks in series from the magazine **110** to the mandrel **121**. In other embodiments, a separate transfer mechanism may be provided to retrieve blanks serially from the magazine and transfer them to the mandrel so that a rotating apparatus may rotate a portion of the blank as hereinafter described.

As shown in FIGS. **9**, **10** and **11**, under the control of PLC **132**, panel rotation unit **124** may extend reciprocating piston rod **206** so that the rotating plate **219** and the suction cups **220***a*, **220***b* thereon are rotated to be in an orientation that is downward facing. Upon coming into close proximity or contact with panel C, suction cups **220***a*, **220***b*, may engage the upward facing surface of panel C of the top blank **111** in the stack. Panels A and B of the blank **111** are at the same time are maintained generally in position up against or proximate the lower surface of mandrel support frame **123**. Suction cups or another additional holding mechanism (not shown) could also be employed to hold the panels A, B, E, and F horizontally against the bottom surfaces of the mandrel. Panels A, B, C and D may also continue to be supported underneath by physical contact with the upper surface of another underlying blank **111** in the stack.

With particular reference now to FIGS. **9**, **10** and **11**, mandrel support frame **123**, panel rotating apparatus **124** may be operated by PLC **132** to rotate rotating plate **219** about hinge **209** so that panels C and D may be rotated—preferably approximately ninety (90) degrees—about a pre-determined fold line X between panel B and C. Thus panels C and D are rotated relative to panels A, B, E and F, from a generally flat and horizontal orientation to a generally vertical and angled orientation, thus forming a generally L-shaped configuration. It is this step that makes the rest of the carton forming process using system **100** possible.

Vacuum may also be applied to suction cups **220***a*, **220***b* through operation of PLC **132** during the rotation of the panels C and D. The air suction force that may be developed at the outer surfaces of suction cups **220***a*, **220***b* of panel rotation apparatus **124** may be sufficient so that panels C and D of a blank **111** can be rotated from the position shown in FIG. **9**, through the intermediate position shown in FIG. **10**, to the position shown in FIG. **11**.

Once panel C reaches the position shown in FIG. **11**, the suction cups **220***a*, **220***b* associated with panel rotating apparatus plate **124** hold panel C against the forward facing surfaces of mandrel side plates **140***a*, **140***b* and the outer surface of **219***a* of panel rotating plate **219** with panel D also generally remaining in a vertical orientation. It should be noted that the folding of panel C relative to panel B takes place about fold line X. While there may be a predetermined fold line Y between panel C and panel D, until one is bent relative to the other, panels C and D will tend to remain in the same general plane.

The rotation of panels C and D will also tend to pull that blank upwards and perhaps a very small distance forward, the effect of which may be to free the top blank from the blank beneath it that is still on the stack. The result is that the top blank is now capable of being moved forward by the mandrel apparatus **120** towards the rail and plough apparatus **300**.

It will be appreciated that in some embodiments, the system could be configured so that magazine **110** may discharge blanks **111** to a mandrel apparatus like apparatus **120** from the top rather than the bottom. However, discharging blanks from the top may require inverting some or all of the aforementioned components.

Next, mandrel support and moving apparatus **125** may be used to move mandrel apparatus **120** and mandrel support frame **123** longitudinally forward towards rail and plough apparatus **300**, thus also moving blank **111** that is held to mandrel **121**. To create this forward longitudinal movement of the mandrel apparatus **120**, PLC **132** can operate servo drive motor **170**, to move drive belt **178** longitudinally in a direction that causes slider plate **160** to slide forward on guide rails **172***a*, **172***b*. With the movement of slide plate **160**, the vertical support **152**, mandrel support frame **123**, and mandrel apparatus **120** that is attached to frame **123**, also move longitudinally towards rail and plough apparatus **300**.

With particular reference now to FIGS. **12-17**, mandrel **121** is moved longitudinally forward, and thus blank **111** which may be secured thereto by the interconnection of panel C to front surface of the plate **219***a*, also moves longitudinally with the mandrel **121**. As blank **111** is moved longitudinally by mandrel apparatus **120**, first rails **302***a*, **302***b* may engage a portion of panel D, so that panel D and attached flaps d**1**, d**2** and d**3**, are folded along fold line Y downward from a generally vertical orientation to a generally horizontal orientation

as shown in FIG. **13** whereby panel D is held against the upper surface of mandrel plate **140***c*.

With continued longitudinal movement of blank **111**, opposed inner side rails **304***a*, **304***b* may engage flaps **c2** and **c1** respectively and may fold and maintain the flaps **c1** and **c2** in a generally rearward longitudinal orientation. At about the same time, a pair of wedge plough devices **310***a*, **310***b* may commence the generally inward folding of outer panels E and F respectively from a generally horizontal orientation towards a generally vertical orientation.

As shown in FIGS. **14** and **15**, with continued longitudinal movement of mandrel **121** and blank **111** secured thereto, next opposed, upwardly and inwardly oriented guide rails **308***a*, **308***b*, may take over from plough devices **310***a*, **310***b*, to engage the lower surfaces of panels E and F and to complete the inward folding of outer panels E and F respectively to a vertical position as shown in FIG. **15**. It should be noted that in FIG. **14**, mandrel **121** shown only for illustrative purposes detached from the rear surface of panel C. Of course, during the actual movement of mandrel **121** forwards through folding apparatus **121**, in operation, the mandrel **121** will typically remain in very close proximity or actual contact with panel C, as the blank **111** is pushed through the folding apparatus **130**. Also, generally downwardly and inwardly oriented guide rails **306***a*, **306***b* may provide inward and downward folding of flaps **d3** and **d2** respectively to a generally vertical downward position.

Lower support rails **312***a*, **312***b* may assist in supporting blank **111** once it has been removed from the support of the stack of blanks **111** in the magazine **110**.

Also as shown in FIGS. **16**, **17** and **18**, as blank **111** moves longitudinally, the side panels E and F are compressed in such a manner that the portions of panel E engage surfaces of flaps **d3** and **c1**, and portions of panel F engage surfaces of flaps **c2** and **d2**. With the assistance of adhesive positioned between the respective surfaces, compression rails **314***a*, **314***b* may help ensure appropriate sealing of the flaps and panels.

Under the control of PLC **132**, or pursuant to another control or trigger, adhesive applicators **400** can apply a suitable adhesive at appropriate positions on the panels and/or flaps so that when the panels and flaps are folded as just described, the panels and flaps can be held in the desired carton configuration.

As is shown in FIGS. **16**, **17** and **18**, as blank **111** moves further in a longitudinal direction, the folded blank, with panels secured appropriately with for example adhesive, will move past the end of overhead rails **302***a*, **302***b* and upward rails **308***a*, **308***b*. Also, as shown in FIG. **17**, the rear edge of rear panel A will pass lower latch devices **318***a*, **318***b*, and the rearward edge of flap **d1** will pass upper latch devices **316***a*, **316***b*. This longitudinal positioning of blank **111** may cause latch devices **316***a*, **316***b*, **318***a*, **318***b* to be activated.

Once activated, the latch devices may restrict the carton from moving longitudinally backwards, when the mandrel apparatus **120** is withdrawn.

Additionally, upon receiving the signal from the position sensor that the blank has reached the release position as shown in FIG. **18** (i.e. the mandrel has reached the end of its stroke cycle), PLC **132** will send a signal to servo motor **170** causing it to reverse its rotational direction, which in turn causes drive belt **178** to move in the opposite direction. This movement of belt **178** causes slider plate **160** and thus mandrel support frame **123** and mandrel apparatus **120** to also move in a reverse or rearward direction (not shown). Additionally, PLC **132** will send appropriate signals to deactivate the vacuum force provided at suction cups **220***a* and **220***b* in panel rotating apparatus plate **219** so that the container is no longer held on the mandrel by the suction cup forces.

Once the mandrel **121** has been withdrawn from the blank (which has now been formed into a container—carton—**111***a*), the container **111***a* may no longer be supported, except possibly at least to some extent by compression rails **314***a*, **314***b*. Thus, container **111***a* may be transferred to a carton conveyor (not shown) that is configured to receive the container and the container is then carried away by the carton conveyor to be loaded and/or processed further. Carton conveyors are well known in the art and any suitable known carton conveyor may be utilized.

A device may be employed to push the container **111***a* (eg. Carton) out from between rails **314***a*, **314***b*. For example, a simple push down cylinder device that may also be controlled by PLC **132** may be used. Other examples of transfer devices that might be employed to transfer the carton from the end of guide apparatus **130** to a carton conveyor include a "blow-off" system that may use one or more jets of compressed air, a suction cup system, the use of pushing arm or simply allowing for freefall of the formed carton.

While the container **111***a* is being transferred to the carton conveyor, the mandrel apparatus **120** can be returned to its start position (not shown), ready to recommence the process that has just been described above to form another carton.

It is anticipated that cartons may be formed at a rate of in the range of about 1 to about 60 cartons per minute.

Many variations of the embodiments described above are possible. By way of example only, one portion of the blank may not have to be rotated from a generally flat configuration with the rest of the carton blank, ninety degrees relative to remaining portions of the panel, to set-up the folding process. In some other embodiments, the initial rotation of one portion of the blank from a generally flat configuration of the entire blank, may for example be only in the range of from forty-five degrees to ninety degrees. Once the first portion has been rotated from the flat configuration to the angled position, the blank is then more readily capable of being engaged by other mechanisms such that a further rotation of the first portion and other portions of the blank can be carried out to bring the first portion to a vertical position against the front face of the mandrel. Alternatively, in some applications a mandrel might be employed which has outer surfaces that are not completely at rights angles to each other. A carton blank could then be utilized in the system such that when folded, the blank may not form a cuboid shape.

The system could, with some other modifications, be provided in other spatial orientations such as in a vertically inverted configuration. In such a vertically inverted configuration, a magazine may hold blanks in a stack but be configured to dispense the blanks from the bottom of the stack. A blank could then be retrieved from the bottom of the stack and the front panels could be rotated ninety degrees downwards (instead of upwards) to engage a mandrel, so that like in the embodiment described above, an L-shaped configuration is formed around the mandrel. In some such embodiments, a separate rotation device may not be required to rotate the front panels ninety degrees to engage the mandrel. Once released from the magazine, the front panels may rotate and pivot downwards. Suction cups or another holding mechanism could then be employed to hold the front panels vertically against the front surface of the mandrel. An additional holding mechanism could also be employed at a top plate of the mandrel so that the L-shaped blank is held to the mandrel before and during its passage through a holding apparatus. Such a holding apparatus may be simply the inverted configu-

ration to the holding apparatus described above. An example of such an embodiment is illustrated in FIGS. **19** and **20**.

With reference to FIGS. **19** and **20**, system **1100** is constructed substantially the same way as system **100** as illustrated in FIGS. **1** to **18** with generally all the same components. However, the orientation of system **1100** is vertically inverted in its orientation compared to system **100**. Therefore, while each blank **1111** of system **1100** (each of which may be like blank **111**) is moved longitudinally in a generally horizontal direction, the process and components are vertically inverted about a horizontal longitudinal axis.

System **1100** therefore may have a magazine **1110** holding blanks **1111** vertically above mandrel apparatus **1120**, panel rotating apparatus **1124** and mandrel movement and support apparatus **1125**. Mandrel apparatus **1120** may be constructed like mandrel apparatus **120** with a mandrel **1121**, but may be oriented in a vertically inverted configuration compared to apparatus **120**. Likewise panel rotating apparatus **1124** and mandrel movement and support apparatus **1125** may be constructed like panel rotating apparatus **124** and mandrel movement and support apparatus **125** respectively, but each is also oriented, vertically inverted. System **1100** may also include a panel folding and guide apparatus **1300** that may be a rail and plough constructed like apparatus **300**, but again it may be vertically inverted.

In operation of system **1100**, magazine **1110** may provide blanks **1111** in a stack such that there is a downwardly facing, but generally horizontally oriented surface of panel C in the bottom-most blank in the stack that is just in contact with, or is a very short distance spaced from the bottom surfaces of mandrel **1121**. Next, magazine **1110** and panel rotating apparatus **1124** may co-operate so that the single blank **1111** from the "bottom" of the stack of blanks may be retrieved from the magazine **1110** and be transferred to the mandrel apparatus **1120**. It should be noted that in this embodiment, gravity may assist in releasing a blank **1111** from magazine **1110** and securing it to mandrel **1121**.

As with the embodiment of FIGS. **1-18** described above, a PLC like PLC **132** may cause panel rotation unit **1124** to extend so that a rotating plate **1219** and the suction cups thereon are rotated to be in an orientation that is upward facing. Upon coming into close proximity or contact with a panel C, suction cups may engage the downward facing surface of panel C of the bottom blank **1111** in the stack. The blank **1111** may also at the same time be supported proximate the upper surface of the mandrel support frame **1123**.

Thereafter panel rotating apparatus **1124** may be operated to rotate plate **1219** so that panels C and D may be rotated—preferably approximately ninety (90) degrees—downwards, but otherwise generally as described above, to form a generally L-shaped configuration. Vacuum may also be applied to suction cups through operation of the PLC during the rotation of the panels C and D. The air suction force that may be developed at the outer surfaces of suction cups of panel rotation apparatus **1124** may be sufficient so that panels C and D of a blank **1111** can be rotated from the position shown in FIG. **19** to a vertical position.

Once panel C reaches the vertical downward position, the suction cups associated with panel rotating apparatus plate **1124** hold panel C against the forward facing surfaces of mandrel **1121** with panel D also generally remaining in a vertically downward orientation.

The rotation of panels C and D will also tend to pull that blank downwards and perhaps a very small distance forward direction, the effect of which may be to free the blank from magazine **1110**. The result is that the "bottom" blank is now capable of being moved forward by the mandrel apparatus **1120** towards the panel folding and guide apparatus **1300**. The magazine may again comprise a stack of blanks held in position by vertical rails (not shown). Here, where the carton former takes blanks from the bottom of the stack, gravity may bring the cartons to the bottom of the magazine. At the bottom of the stack, there may be small metal tabs attached to the rails (not shown) that protrude out into the plane of the stack such that the stack will rest on the tabs. In essence, the stack is held up by the tabs against or closely proximate to the top of the mandrel. When the panel rotation device **1124** engages the bottom carton blank and rotates the front panel downwards, the bottom carton blank may be pulled through the tabs and out of the magazine. The tabs themselves may remain stationary, but because the carton blank may be flexible, so that the carton blank will bend from the force of the rotation device and pull out of the magazine. In this way, the system may prevent more than one blank at a time from being taken. Of course various other embodiments of how a magazine can be set up and how a carton can be taken from a magazine.

Thereafter, the panel folding and guide apparatus **1300** will cause the blank to be folded in the same manner as described above in relation to rail and plough apparatus **300**, but in an orientation that is vertically inverted.

It will be appreciated that in some embodiments, the system could be also configured so that a magazine may discharge blanks to a mandrel apparatus from the side rather than the top or bottom whereby the general orientation of the movement of the blank and the mandrel apparatus through a rail and plough apparatus is generally vertically upwards or downwards. One example of such a configuration is illustrated in FIGS. **21** and **22**. System **2100** is also constructed substantially the same way as system **100** with generally all the same components. However, the orientation of system **2100** rotated by about 90 degrees to generally vertically orientation compared to system **100**. Therefore, each blank **2111** of system **2100** (each of which may be like blank **111**) is moved generally longitudinally in a generally vertically downwards direction.

System **2100** therefore may have a magazine **2110** holding blanks **2111** that is positioned to hold blanks **2111** in a generally vertical orientation and horizontally spaced from mandrel apparatus **2120**, panel rotating apparatus **2124** and mandrel movement and support apparatus **2125**. Mandrel apparatus **2120** may thus be constructed like mandrel apparatus **120** with a mandrel **121**, but may be oriented in a generally 90 degree rotated configuration compared to mandrel apparatus **120**. Likewise panel rotating apparatus **2124** and mandrel movement and support apparatus **2125** may be constructed like panel rotating apparatus **124** and mandrel movement and support apparatus **125** respectively, but each is also oriented in a generally 90 degree rotated configuration. System **2100** may also include a panel folding and guide apparatus **2300** that may be a rail and plough constructed like apparatus **300**, but again can be oriented in a generally 90 degree rotated position compared to apparatus **300**.

In operation of system **2100**, magazine **2110** may provide blanks in a stack such that there is a vertically oriented outward facing, surface of the "bottom" blank in the stack that is just in contact with, or is a very short distance spaced from, the outward facing surfaces of mandrel **2121**. Next, magazine **2110** and panel rotating apparatus **2124** may co-operate so that the single blank **2111** from the "bottom" of the stack of blanks may be retrieved from the magazine **2110** and be transferred to the mandrel apparatus **2120**.

As with the embodiment of FIGS. **1-18** described above, a PLC like PLC **132** may cause panel rotation apparatus **2124** to extend so that a rotating plate **2219** and suction cups thereon

are rotated to be in an orientation that is generally vertical. Upon coming into close proximity or contact with a panel C, suction cups may engage the vertically oriented and outward facing surface of panel C of the bottom blank **2111** in the stack. The blank **2111** may also at the same time be supported proximate the vertical surface of the mandrel support frame by the magazine until the blank has been engaged by the panel rotation apparatus **2124**.

Thereafter panel rotating apparatus **2124** may be operated by rotating plate **2219** so that panels C and D may be rotated—preferably approximately ninety (90) degrees to a generally horizontal position, but otherwise generally as describe above, to form a generally L-shaped configuration. Vacuum may also be applied to suction cups through operation of the PLC during the rotation of the panels C and D. The air suction force that may be developed at the outer surfaces of suction cups of panel rotation apparatus **2124** may be sufficient so that panels C and D of a blank can be rotated approximately 90 degrees.

Once panel C reaches the horizontal position, the suction cups associated with panel rotating apparatus plate **2124** hold panel C against the forward facing surfaces of mandrel **2121** with panel D also generally remaining in a horizontal orientation.

The rotation of panels C and D will also tend to pull that blank horizontally and perhaps a very small distance downward direction, the effect of which may be to free the top blank from magazine **2110**. The result is that the bottom blank is now capable of being moved forward by the mandrel apparatus **2120** towards the panel folding and guide apparatus **2300**. As in the other two systems **100** and **1100** described above, the magazine employed in system **2100** may be just a stack of carton blanks held in position by horizontal rails (not shown). The magazine may operate using a combination of the other two types of magazines described above (e.g. the orientations in FIGS. **1** and **19**). Because gravity would not pull the carton blanks to the "bottom" of the stack, it could utilize a PLC controlled motor to push the whole stack sequentially towards the mandrel as carton blanks are taken from the bottom of the stack and formed. In addition, to prevent the carton blanks from tipping over and falling out of the magazine **2110**, at the bottom of the stack, there could be small metal tabs attached to the rails (not shown in the drawings) that may protrude out into the plane of the stack such that the stack will rest on the tabs after being advanced by the PLC controlled motor. In general, the stack may be held up by the tabs against or closely proximate to the top of the mandrel. When the panel rotation apparatus **2124** engages the bottom carton blank and rotates the front panel towards the horizontal, the bottom carton blank may be pulled through the tabs and out of the magazine **2110**. The tabs themselves may remain stationary, but because the carton blank is slightly flexible, the carton blank may bend from the force of the rotation device and pull out of the magazine. In this way, the system **2100** prevents more than one blank at a time from being taken. Of course other embodiments for a magazine set-up could be employed in system **2100**.

Thereafter, the panel folding and guide apparatus **2300** will cause the blank to be folded in the same manner as described above in relation to rail and plough apparatus **300**, but in an orientation that is vertically inverted.

In yet another embodiment as depicted in FIGS. **23** to **26**, a system **3100** is illustrated in which the mandrel may be decoupled from the panel rotating apparatus and support frame. In such a configuration, the panel rotation apparatus and support frame may remain in a fixed position and not move with the mandrel and partially folded blank in a longitudinal direction towards the rail and plough apparatus.

System **3100** may for the most part be constructed substantially the same way as system **100** with generally most of the same components. System **3100** therefore may have a magazine **3110** holding blanks **3111** below a mandrel apparatus **3120**, a panel rotating apparatus **3124** and a mandrel movement and support apparatus (not shown). Mandrel apparatus **3120** may be constructed in a similar manner to mandrel apparatus **120** with a mandrel **3121**. Likewise panel rotating apparatus **3124** and mandrel movement and support apparatus may be constructed like panel rotating apparatus **124** and mandrel movement and support apparatus **125** respectively. However, panel rotating apparatus **3124** is decoupled from mandrel movement and support apparatus. System **3100** may also include a panel folding and guide apparatus **3300** that may be a rail and plough constructed like apparatus **300**.

Mandrel **3121** may include a pair of spaced opposed elongated and longitudinally extending side plate members **3140***a* and **3140***b*. Side plates **3140***a*, **3140***b* may be interconnected by and joined to an upper horizontally oriented plate **3140***c*. Side plates **3140***a*, **3140***b* and upper plate **3140***c* may be integrally formed together. Mandrel side plates **3140***a* and **3140***b* may contain a groove or channel (not shown) on their inner surfaces for receiving mandrel support rails **3141***a*, **3141***b* respectively so that the during extraction of a blank **3111** from magazine **3110**, mandrel **3121** can be supported by the support frame **3123** and may be generally restrained from vertical and transverse motion. However, it should be noted that during longitudinal movement of mandrel **3121** caused by movement and support apparatus (not shown), mandrel side plates **3140***a* and **3140***b* will slide longitudinally relative to rails **3141***a*, **3141***b* respectively. The result may be that after extraction of a blank **3111** from magazine **3110**, and the initial folding of the blank **3111** on mandrel **3121**, mandrel **3121** can move away with the extracted blank **3111** longitudinally from rotating apparatus **3124** and support frame **3123**.

Mandrel **3121** may be interconnected to and supported by a vertical frame support member **3152** having a connection plate **3153** extending horizontally at the lower surface of vertical member **3152**. Plate **3153** may have screw holes **3155** which may enable screws (not shown) to pass down into threaded holes (not shown) in an upper horizontal surface of mandrel plate **3140***c*. Vertical support member **3152** may be conveniently formed from a light but relatively strong material that can be readily formed into a tube, such as for example aluminium. Vertical support member **3152** may be formed as a hollow channel member that has a longitudinally extending cavity that allows for electrical and communication cables and pressurized/vacuum air hoses to pass through from an upper end to a lower end. In this way, electrical power/communication cable and air hoses can deliver power, electrical signals and air to the suction cups **3199***a*, **3199***b* that are positioned to face outwards in a generally horizontal orientation. Suction cups can be mounted in the end faces of side plates **3140***a*, **3140***b* respectively. The supply of vacuum to suction cups **3199***a*, **3199***b* may be controlled by a PLC like PLC **32**.

Vertical member **3152** also has an upper end portion that is interconnected to the mandrel moving apparatus (not shown). Mandrel support and moving apparatus may be used to support and move in reciprocating forward and rearward longitudinal movement mandrel **3121**.

Panel rotating apparatus **3124** may engage one blank **3111** and may be employed to rotate a blank **3111** panels C and D relative to one or more other panels. The movement of unit **3124** can be controlled by the PLC in such a manner that it can

rotate so as to move a panel C (and panel D which is attached to an end of panel C) of a carton blank **3111** through a rotation of approximately 90 degrees, in an aligned manner, at an appropriate time.

Unit **3124** will be described in overview and with particular reference to FIGS. **24** and **25**. Like unit **124** in the previous system **100**, unit **3124** may include a longitudinally oriented piston device **3202** which has piston blocks that rest on bottom plate **3150***c* of support frame **3123**. Piston **3202** may be a conventional pneumatic reciprocating cylinder and is operable to move in a reciprocal movement between a fully extended position (not shown) and a retracted position. To channel the compressed air appropriately, valves (not shown) can be driven between open and closed positions by solenoids responsive to signals from PLC **132**. The valves could be located proximate the piston **3202** or be disposed elsewhere. Electrical lines carrying signals from PLC could also pass through vertical member **3152** to operate the valves.

A piston rod of piston **3202** is provided with an extended arm portion that provides for a hinge connection for pivoting the panel rotating apparatus **3124** between a generally horizontal position and a generally vertical position.

Panel rotation apparatus **3124** also comprises panel rotating plate **3219** Panel rotating plate **3219** may be attached by way of piano hinge to forward lower extensions of side plates **3150***a,* **3150***b* of support frame **3123**. As a result of the movement of piston the cylinder rod will extend or retract allowing the arm to pivot relative to rotating apparatus **3124**. The movement of piston rod thus causes the panel rotating plate **3219** to rotate through a certain angular distance relative to mandrel **3121**.

Air suction cups **3220***a* and **3220***b* may be interconnected through block units to a source of vacuum. A plurality of valves that may be operated by the PLC and may also include a vacuum generator apparatus such as apparatus **221** in the previous system **100**. If a vacuum generator is utilized, pressurized air may be delivered from an external source through vertical support member **3152**. The vacuum generator will then convert the pressurized air to a vacuum that can then be delivered to suction cups **3220***a*, **3220***b.*

In operation of system **3100**, magazine **3110** may be raised so that the upper generally horizontally oriented surface of the upper-most blank **3111** is just in contact with, or is a very short distance spaced from (e.g. within ¼ inch) the bottom surfaces of frame **3123** and mandrel **3121**. Next, magazine **3110** and panel rotating apparatus **3124** may co-operate so that the single blank **3111** from the top of the stack of carton blanks may be retrieved from the magazine **3110** and be transferred to the mandrel apparatus **3120**. Thus, in this way the panel rotating apparatus **3124** may also serve as a transfer mechanism for transferring carton blanks in series from the magazine **3110** to the mandrel **3121**.

Under the control of the PLC, panel rotation apparatus **3124** may extend reciprocating piston rod so that the rotating plate **3219** and the suction cups **3220***a,* **3220***b* thereon are rotated to be in an orientation that is downward facing. Upon coming into close proximity or contact with panel C, suction cups **3220***a,* **3220***b,* may engage the upward facing surface of panel C of the top blank **3111** in the stack. Panels A and B of the blank **3111** are at the same time are maintained generally in position up against or proximate the lower surface of support frame **3123** and mandrel side plates **3140***a,* **3140***b.* Panels A, B, C and D continue to be supported underneath by physical contact with the upper surface of another underlying blank **111** in the stack.

Panel rotating apparatus **3124** may be operated by the PLC to rotate rotating plate **3219** about hinge so that panels C and D may be rotated—preferably approximately ninety (90) degrees—about a pre-determined fold line between panel B and C. Thus panels C and D are rotated relative to panels A and B from a generally flat and horizontal orientation to a generally vertical and angled orientation, thus forming a generally L-shaped configuration.

Vacuum may also be applied to suction cups **3220***a,* **3220***b* through operation of PLC **132** during the rotation of the panels C and D. The air suction force that may be developed at the outer surfaces of suction cups **3220***a,* **3220***b* of panel rotation apparatus **3124** may be sufficient so that panels C and D of a blank **3111** can be rotated from the flat position shown in FIG. **23** to an angled configuration.

Once panel C reaches the vertical position, the suction cups **3220***a,* **3220***b* associated with panel rotating apparatus plate **3129** may hold panel C against the forward facing surfaces of mandrel side plates **3140***a,* **3140***b* and the outer surface of **3219***a* of panel rotating plate **3219** with panel D also generally remaining in a vertical orientation until suction cups **3199***a,* **3199***b* of mandrel **3121** are activated by PLC and can then engage panel C of blank **3111**. Once suction cups **3199***a,* **3199***b* of mandrel **3121** are activated and engage panel C of blank **3111**, cups **3220***a* and **3220***b* of rotation apparatus **3124** can be de-activated. The rotation of panels C and D will also tend to pull that blank upwards and perhaps a very small distance forward, the effect of which may be to free the top blank from the blank beneath it that is still on the stack. The result is that the blank **3111** now held by suction cups **3199***a* and **3199***b,* is now capable of being moved forward by the mandrel apparatus **3120** towards the panel folding and guide apparatus **3300**.

Next, mandrel support and moving apparatus (not shown) may be used to move mandrel apparatus **3120** longitudinally forward towards panel folding and guide apparatus **3300**, thus also moving blank **3111** that is held to mandrel **3121**.

System **3100** may have the advantage of allowing for faster operation of the carton former relative to system **100** shown in FIG. **1**. This is because as the mandrel apparatus **3120** is being moved longitudinally forward with a first blank to form a carton, the panel rotation apparatus **3124** can be rotated to engage the surface of a second blank from the magazine. Once the mandrel apparatus **3120** has moved the first blank through the panel folding and guide apparatus **3300** to form a carton and the mandrel apparatus **3120** is reversed to its original position, the panel rotation apparatus **3124** will rotate the front panels of the second blank in an L-shaped configuration around the mandrel **3121**. The mandrel **3121** can now move forward longitudinally with the second blank to repeat the process.

Of course, the above described embodiments are intended to be illustrative only and in no way limiting. The described embodiments of carrying out the invention are susceptible to many modifications of form, arrangement of parts, details and order of operation. The invention, rather, is intended to encompass all such modification within its scope, as defined by the claims.

When introducing elements of the present invention or the embodiments thereof, the articles "a," "an," "the," and "said" are intended to mean that there are one or more of the elements. The terms "comprising," "including," and "having" are intended to be inclusive and mean that there may be additional elements other than the listed elements.

The invention claimed is:

1. A system for forming a carton from a generally flat carton blank, said system comprising:

(a) a mandrel having a first surface oriented generally at a first orientation and a second surface oriented at a second

orientation that is at an angle to said first orientation, wherein said carton blank has a first portion that is operable to be positioned proximate said first surface of said mandrel;

(b) a first rotating apparatus operable to engage a second portion of said carton blank and while said mandrel is stationary, said first rotating apparatus operable to rotate so as to rotate said second portion of said blank from said first orientation while said first portion is maintained in a position proximate said first surface of said mandrel such that said second portion is oriented in said second orientation that is generally at said angle to said first portion of said carton blank and said second portion of said carton blank being positioned proximate said second surface of said mandrel.

2. A system as claimed in claim **1** wherein said angle is approximately 90 degrees.

3. A system as claimed in claim **2** further comprising a second rotating apparatus operable to rotate a third portion of said carton blank relative to said first and second portions to a third orientation.

4. A system as claimed in claim **3** wherein said third orientation is generally parallel to said first orientation.

5. A system as claimed in claim **4** wherein said second rotating apparatus is a portion folding and guide apparatus.

6. A system as claimed in claim **5** further comprising a movement apparatus, said movement apparatus operable for moving said mandrel towards said folding and guide apparatus while said first portion of said carton blank is positioned proximate said first surface of said mandrel and said second portion of said carton blank is positioned proximate said second surface of said mandrel, such that said third portion of said carton blank can be rotated relative to said first and second portions during movement of said mandrel by said movement apparatus by co-operation of said movement apparatus and said folding apparatus.

7. A system as claimed in claim **6** wherein said first rotating apparatus is coupled to said mandrel, such that said movement apparatus is operable for moving said mandrel and said first rotating apparatus towards said folding and guide apparatus.

8. A system as claimed in claim **6** wherein said first rotating apparatus is de-coupled from said mandrel, such that said movement apparatus is operable for moving said mandrel, and not moving said first rotating apparatus, towards said folding and guide apparatus.

9. A system as claimed in claim **2** wherein said first orientation is generally horizontal.

10. A system as claimed in claim **2** wherein said first orientation is generally vertical.

11. A system for forming a carton comprising:

(a) a magazine for storing a plurality of carton blanks in a generally flat configuration, each said carton blank comprising a first panel and a second panel;

(b) a mandrel having a first surface oriented at a first orientation and a second surface oriented at a second orientation that is generally orthogonal to said first orientation;

(c) a panel rotation apparatus operable to engage said second panel of said carton blank and while said mandrel is stationary, said rotation apparatus being operable to rotate so as to rotate said second panel to proximate to, and generally in the same orientation as, said second surface of said mandrel such that said second panel is oriented in a second orientation generally orthogonal to said first panel.

12. A system as claimed in claim **11** further comprising a movement apparatus and a folding apparatus, said movement apparatus for moving said mandrel, while said mandrel is engaged with said carton blank, towards said folding apparatus, so that a third panel of said carton blank can be rotated relative to said first and second panels during movement of said mandrel by said movement apparatus by co-operation of said movement of said mandrel by said movement apparatus and said folding apparatus.

13. A system a claimed in claim **12** wherein said mandrel is movable by said movement apparatus from a first position to a second position, such that during said movement of said mandrel from said first position to said second position, said folding apparatus folds at least said third panel to produce at least part of a carton form.

14. A system a claimed in claim **13** wherein said mandrel is movable from said second position to a third position wherein said mandrel has disengaged from said carton form.

15. A system as claimed in claim **12** wherein said first, second and third panels of said carton blank are arranged longitudinally in series, such that when said first, second and third panels have been oriented in said first, second and third positions, said first panel forms a base wall, said second panel forms an end wall and said third panel forms a forms a top wall of a carton.

16. A system as claimed in claim **12** further comprising a PLC to control the operation of said panel rotation apparatus and said movement apparatus.

17. A system as claimed in claim **12** further comprising a transfer mechanism for transferring a plurality of said carton blanks in series from said magazine to said mandrel.

18. A system as claimed in claim **13**, wherein said carton blank further comprises fourth and fifth panels positioned on opposite sides of said first panel, and connected to said first panel, and wherein said folding apparatus is also operable during movement of said mandrel from said first position to said second position, to fold said fourth and fifth panels to fourth and fifth positions respectively, such that said fourth and first panels form opposed side walls of said carton.

19. A system as claimed in claim **17** further comprising a panel holding mechanism for holding said first panel of said carton blank of said plurality of carton blanks in said first orientation and in a position proximate said first surface of said mandrel while said panel rotation apparatus engages said second panel of said carton blank and rotates said second panel to proximate to, and generally in the same orientation as, said second surface of said mandrel such that said second panel is oriented in said second orientation generally orthogonal to said first panel.

20. A method for forming a carton from a carton blank comprising:

(a) Orienting said carton blank in a generally flat first orientation;

(b) rotating a first portion and a third portion of said blank from said first orientation to a second orientation that is generally orthogonal to a second portion of said carton blank, while said second portion is stationary;

(c) after (b), rotating said third portion of said carton blank relative to said first and second portions to a third orientation;

wherein said rotating of at least a third portion of said carton blank comprises moving the carton blank longitudinally while said first portion of said blank is at said second orientation and said second portion is at said first orientation, and so that said third portion of said carton blank is rotated relative to said first and second portions

during said movement and by co-operation of said movement and engagement with a folding apparatus.

21. A method as claimed in claim **20** wherein said third orientation is generally parallel to said first orientation.

22. A method of forming a carton from a carton blank comprising:

(a) providing a carton blank in a first generally flat orientation, said carton blank having first and second and third portions, said first portion of blank being generally adjacent and parallel to a first portion of a mandrel;

(b) while said mandrel is stationary, rotating said second and third portions of said carton blank about said mandrel so said second and third portions remain generally aligned in the same plane and both are positioned at a second orientation that is generally orthogonal to said first portion.

23. A method as claimed in claim **22** further comprising moving said mandrel and said carton blank longitudinally while said first portion of said blank is at said first orientation and said second portion is at said second orientation, and so that a third portion of said carton blank is rotated relative to said first and second portions by co-operation of said movement and engagement with a folding apparatus.

24. A method for forming a carton from a carton blank comprising:

(a) orienting a carton blank having first, second and third portions all oriented in a first planar orientation;

(b) while said third portion is stationary, rotating said first and second portions of said blank together from said first orientation to a second orientation while maintaining said third portion in said first orientation, said first and second portions being located adjacent to each other;

(c) further rotating said third portion of said carton blank relative to said first and second portions to a third orientation.

25. A method as claimed in claim **24** wherein said third orientation is generally parallel to but spaced from said first orientation.

26. A method for forming a container from a container blank, said method comprising:

(a) orienting a foldable container blank having a plurality of portions all oriented in a first substantially planar orientation;

(b) rotating a first portion and a second portion of said plurality of portions, said first and second portions being joined together and located adjacent each other, together from said first orientation to a second orientation while maintaining a plurality of remaining portions of said blank stationary and in said first orientation;

(c) orienting the second portion and the remaining portions of said blank relative to said first portion to form a container adapted for receiving an item.

27. A system for forming a container from a generally flat foldable blank having a plurality of panels which are all oriented in a first substantially planar orientation, said system comprising:

(a) a mandrel having a first surface oriented generally at a first orientation and a second surface oriented at a second orientation that is at an angle to said first orientation, wherein said blank has a first panel that is operable to be positioned and held proximate said first surface of said mandrel;

(b) a first rotating apparatus operable to engage a second panel and a third panel, said second and third panels being joined together and located adjacent each other, said first rotating apparatus operable to rotate said second and third panels together from said first orientation to a second orientation while a remaining plurality of panels remain in the first orientation and said first panel is maintained in a position proximate said first surface of said mandrel such that said second and third panels are both oriented in said second orientation that is generally at an angle to said first panel and said second panel being positioned proximate said second surface of said mandrel.

28. A system as claimed in claim **27** operable to rotate said third panel of said blank relative to said first and second panels to a third orientation.

29. A system as claimed in claim **28** wherein said third orientation is generally parallel to said first orientation.

30. A system as claimed in claim **28** wherein said system is operable to rotate said third panel of said carton blank by moving said carton blank longitudinally while said first panel of said blank is at said second orientation and said second panel is at said first orientation, and so that said third panel of said carton blank is rotated relative to said first and second panel by co-operation of said movement and engagement with a folding apparatus.

31. A system for forming a carton from a generally flat carton blank, said system comprising:

(a) a mandrel having a first surface oriented generally at a first orientation and a second surface oriented at a second orientation that is at an angle to said first orientation, wherein said carton blank has a first portion that is operable to be positioned proximate said first surface of said mandrel;

(b) a first rotating apparatus operable to engage a second portion of said carton blank and while said mandrel is stationary, rotate said second portion of said blank from said first orientation while said first portion is maintained in a position proximate said first surface of said mandrel such that said second portion is oriented in said second orientation that is generally at said angle to said first portion of said carton blank and said second portion of said carton blank being positioned proximate said second surface of said mandrel;

(c) a movement apparatus, said movement apparatus operable for moving said mandrel towards a folding and guide apparatus while said first portion of said carton blank is positioned proximate said first surface of said mandrel and said second portion of said carton blank is positioned proximate said second surface of said mandrel, such said third portion of said carton blank can be rotated relative to said first and second portions during movement of said mandrel by said movement apparatus by co-operation of said movement apparatus and said folding and guide apparatus.

* * * * *